US007527893B2

(12) **United States Patent**
Larsen

(10) **Patent No.: US 7,527,893 B2**
(45) **Date of Patent: May 5, 2009**

(54) **ELIMINATING INCORRECT BATTERY INSTALLATION**

(75) Inventor: **Glen C. Larsen**, Issaquah, WA (US)

(73) Assignee: **Microsoft Corporation**, Redmond, WA (US)

(*) Notice: Subject to any disclaimer, the term of this patent is extended or adjusted under 35 U.S.C. 154(b) by 337 days.

(21) Appl. No.: **11/439,562**

(22) Filed: **May 23, 2006**

(65) **Prior Publication Data**

US 2007/0275299 A1 Nov. 29, 2007

(51) **Int. Cl.**
H01M 2/10 (2006.01)

(52) **U.S. Cl.** **429/100**

(58) **Field of Classification Search** 429/100
See application file for complete search history.

(56) **References Cited**

U.S. PATENT DOCUMENTS

3,984,257	A	10/1976	Zurcher	
4,578,628	A	3/1986	Siwiak	
5,116,699	A *	5/1992	Miyajima	429/100
5,376,476	A	12/1994	Eylon	
5,431,575	A *	7/1995	Engira	439/218
5,623,550	A	4/1997	Killion	
5,909,102	A	6/1999	Stone, III et al.	
5,962,159	A	10/1999	Satou et al.	
6,001,504	A	12/1999	Batson et al.	
6,023,146	A	2/2000	Casale et al.	
6,338,914	B1	1/2002	Schuurmans	
6,345,464	B1	2/2002	Kim	
6,359,418	B1	3/2002	Regan et al.	
6,361,897	B1	3/2002	Snyder	
2006/0028175	A1	2/2006	Tsiang	

OTHER PUBLICATIONS

International Search Report PCT/US2007/009912, dated Oct. 19, 2007, pp. 1-7.
"Reverse-Current Circuitry Protection", http://pdfserv.maxim-ic.com/en/an/AN636.pdf.
"Battery Cavity Design", http://www.duracell.com/procell/design/cavity.asp.
John Guy, "Circuit provides reverse-battery protection", http://www.edn.com/article/CA56208.html.

* cited by examiner

Primary Examiner—Patrick Ryan
Assistant Examiner—Thomas H. Parsons

(57) **ABSTRACT**

One or more dual-contact assemblies and a battery receptacle including such assemblies. A dual-contact assembly includes a positive contact, a negative contact, and an insulating connector disposed between and connecting each of the positive contact and the negative contact in an electrically insulating disposition relative to each other. A dual-contact assembly hereof can be resilient such that at least one of the positive contact, the negative contact and the insulating connector of the resilient dual-contact assembly are resiliently movable, the insulating connector maintaining the positive and negative contacts of the resilient dual-contact assembly in an electrically insulated disposition relative to each other. In a battery receptacle, at least two dual-contact assemblies are connected to a substrate in a battery receiving disposition.

20 Claims, 11 Drawing Sheets

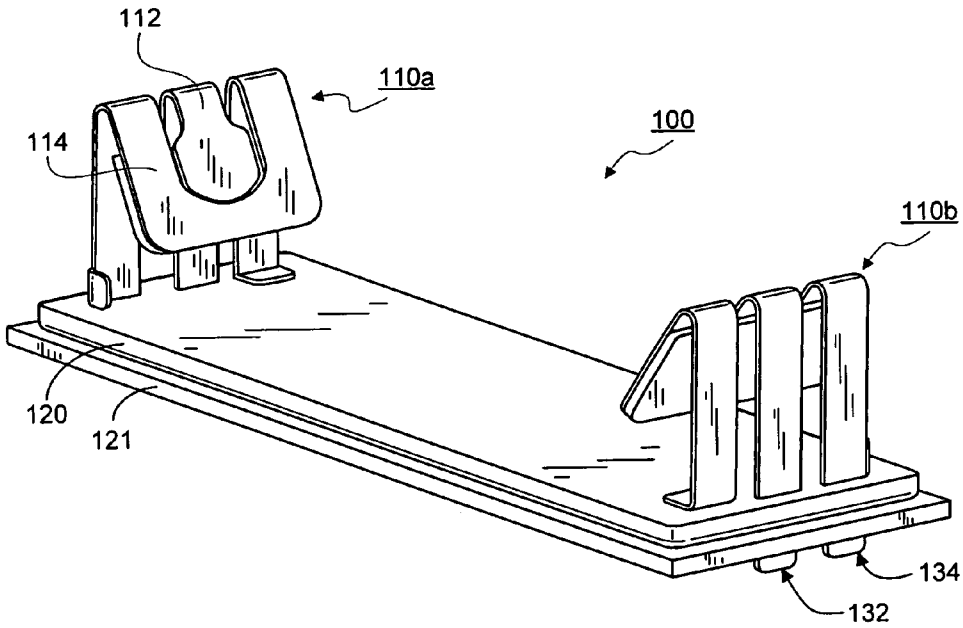

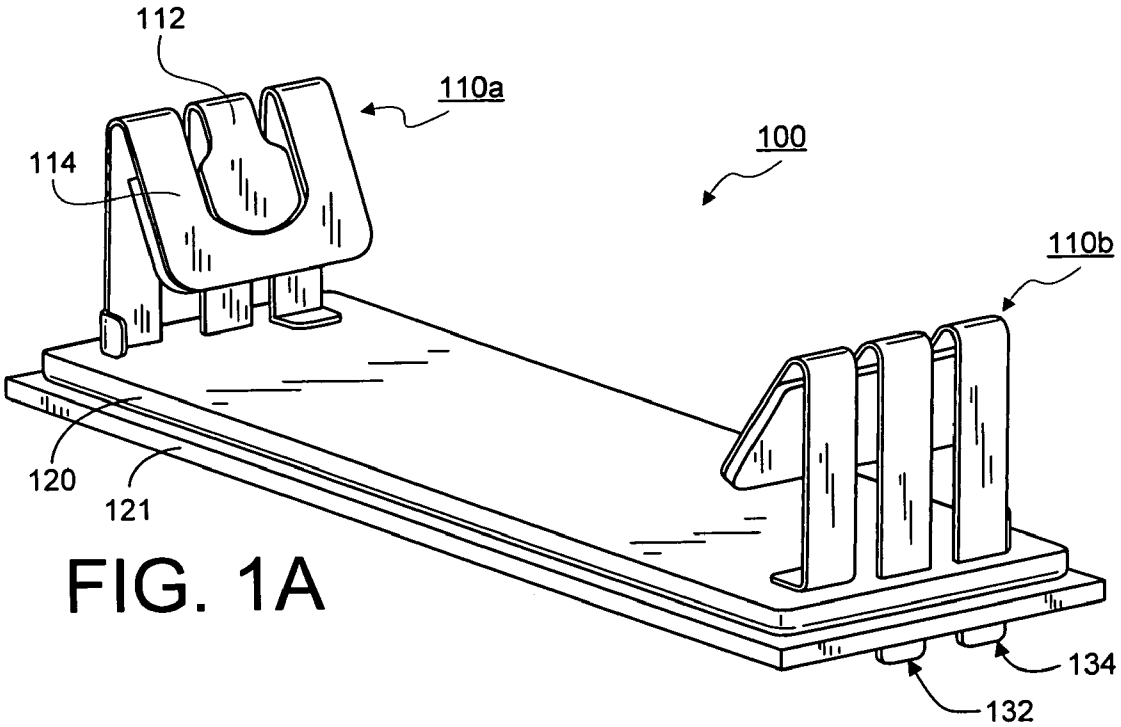
112
110a
100
114
110b
120
121
134
132

FIG. 1A

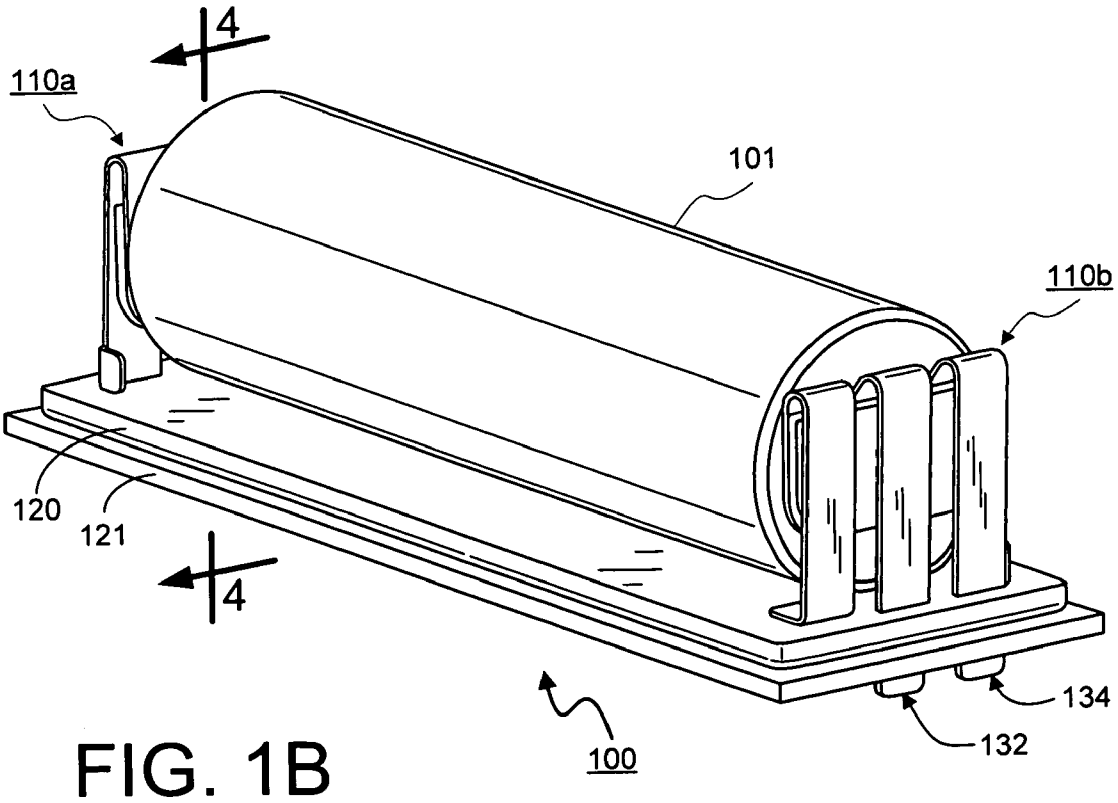
4
110a
101
110b
120
121
4
134
132
100

FIG. 1B

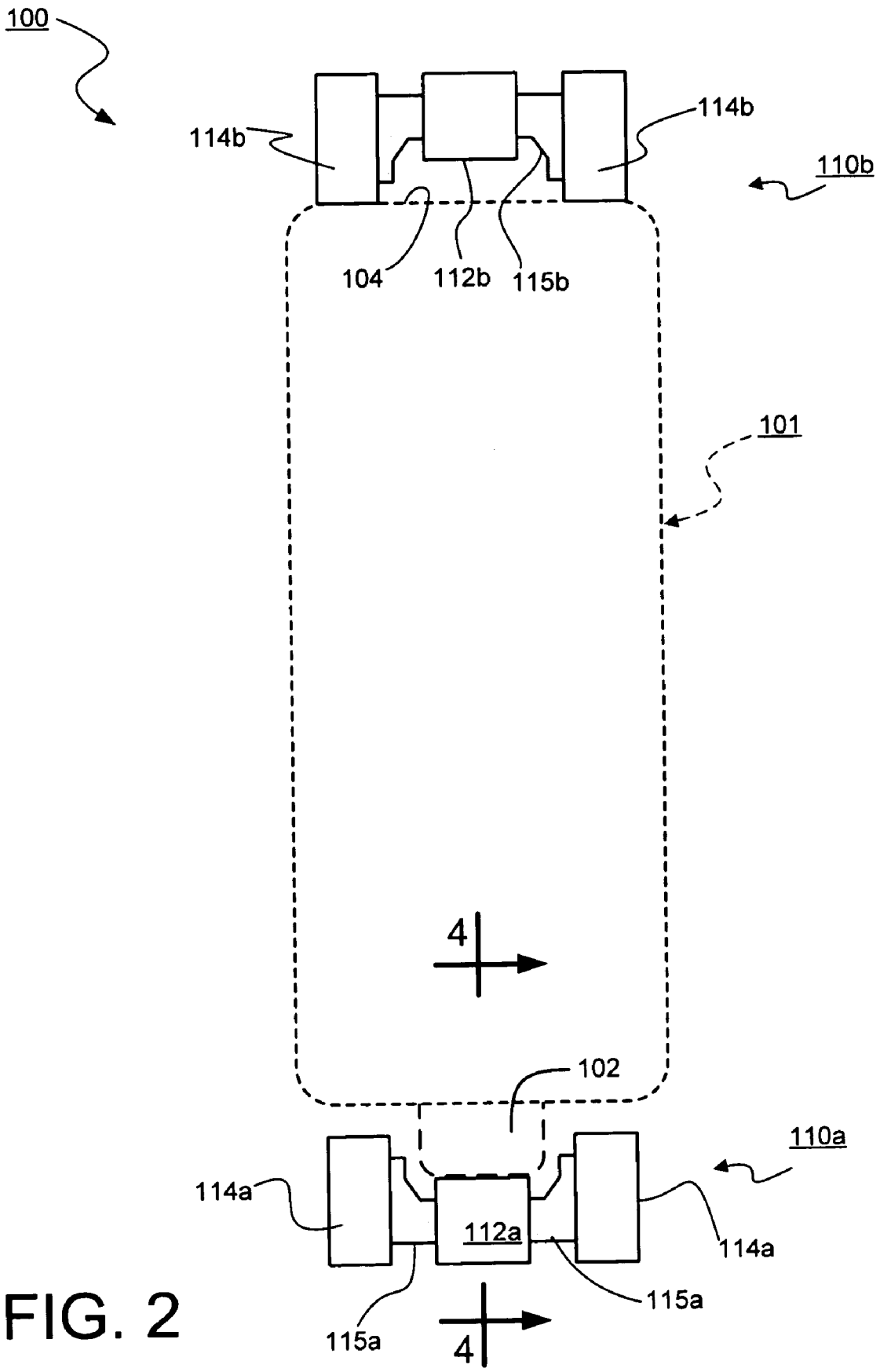
100
114b
114b
110b
104
112b
115b
101
4
102
110a
114a
112a
114a
115a
115a
4

FIG. 2

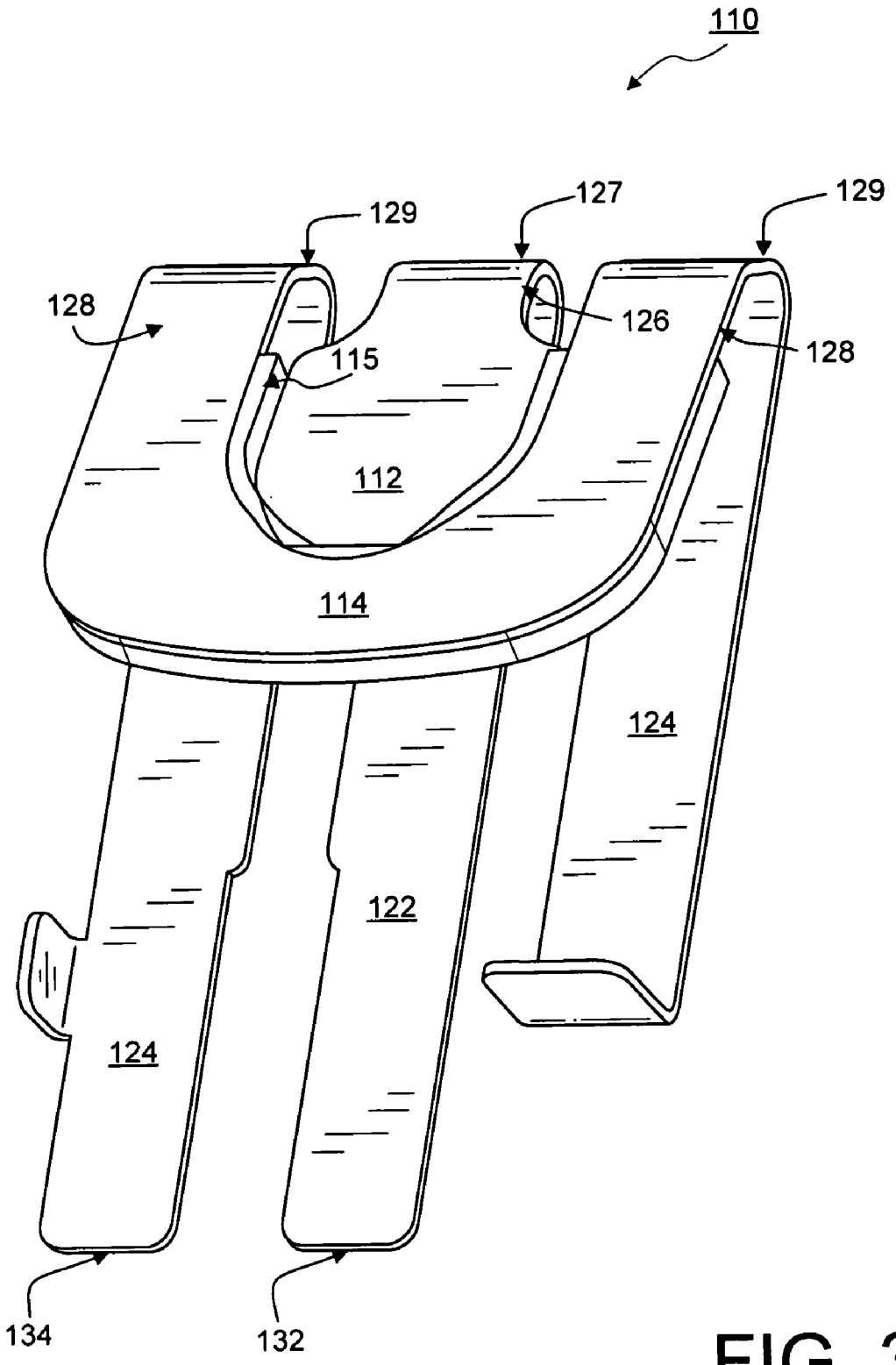

FIG. 3

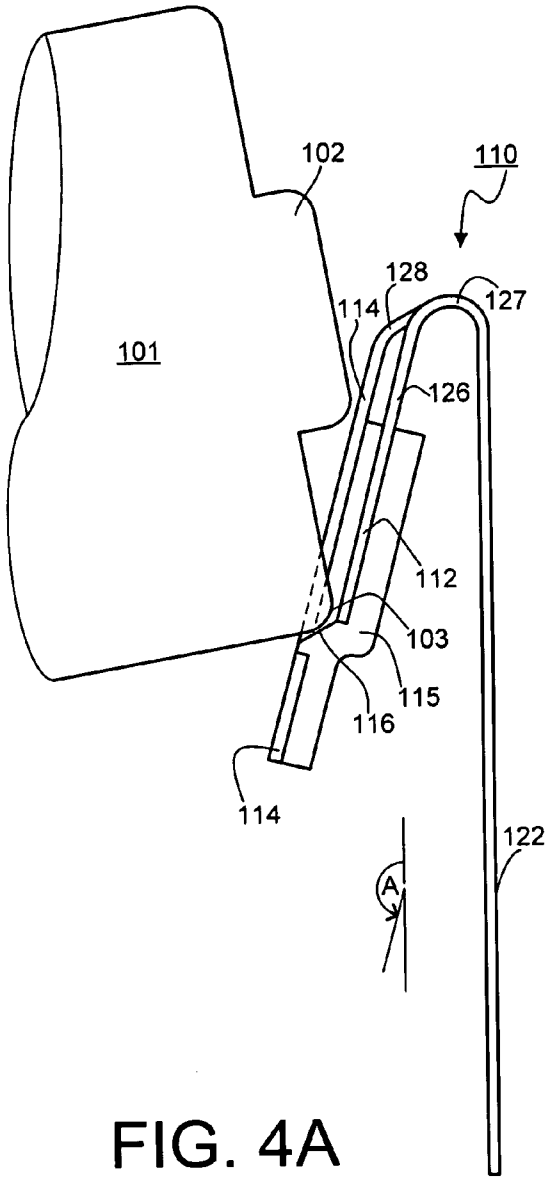
102
110
128
127
114
101
126
112
103
115
116
114
122
A

FIG. 4A

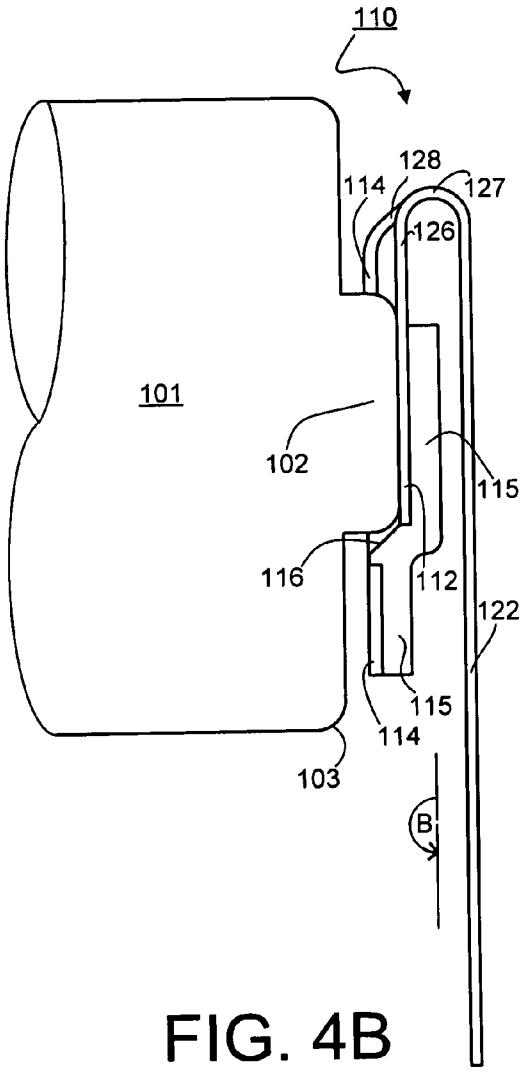
110
128
114
127
126
101
102
115
116
112
122
115
114
103
B

FIG. 4B

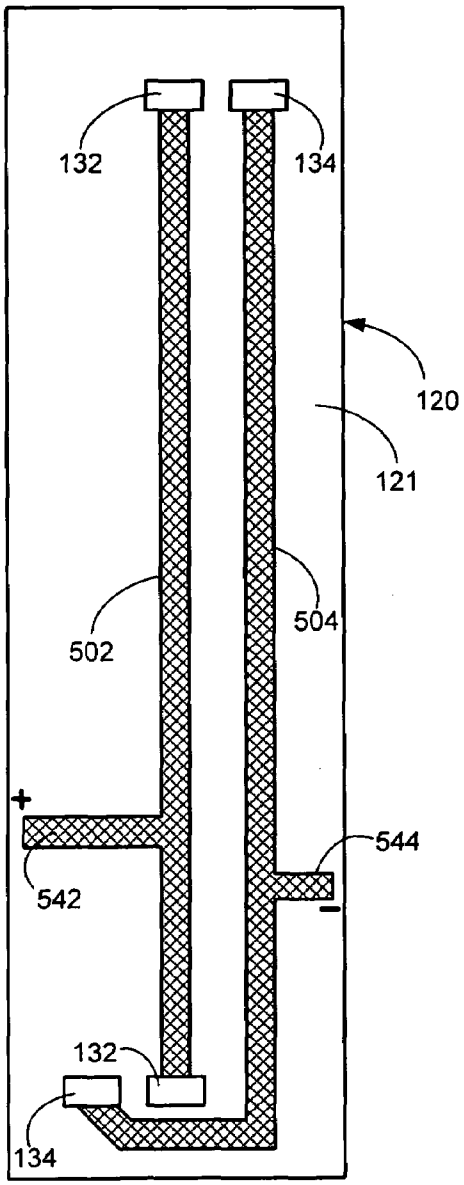
132
134
120
121
502
504
+
542
544
−
132
134

FIG. 5A

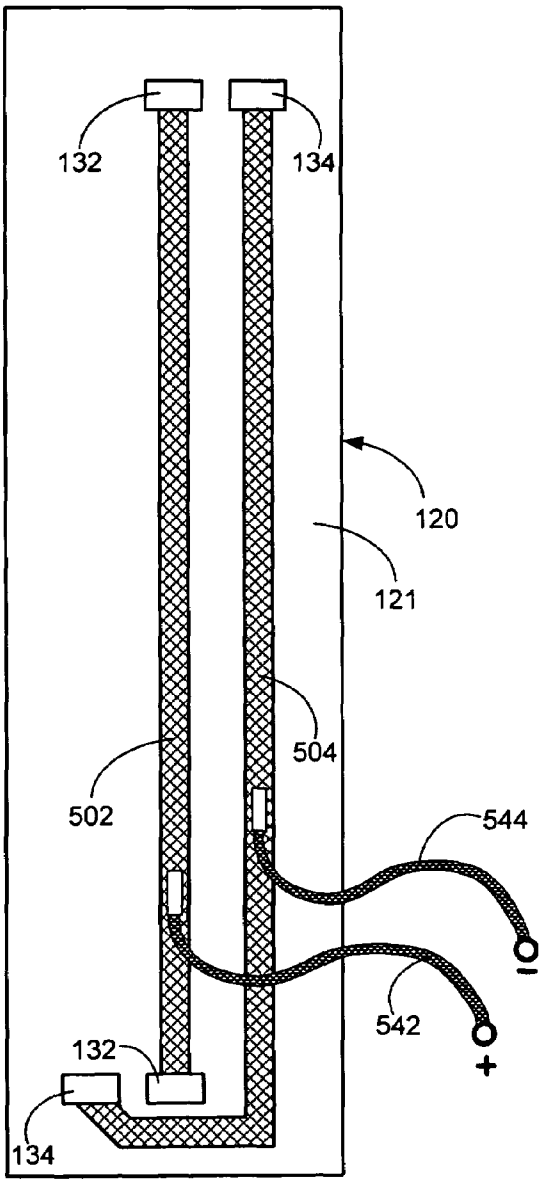
132
134
120
121
504
502
544
542
−
+
132
134

FIG. 5B

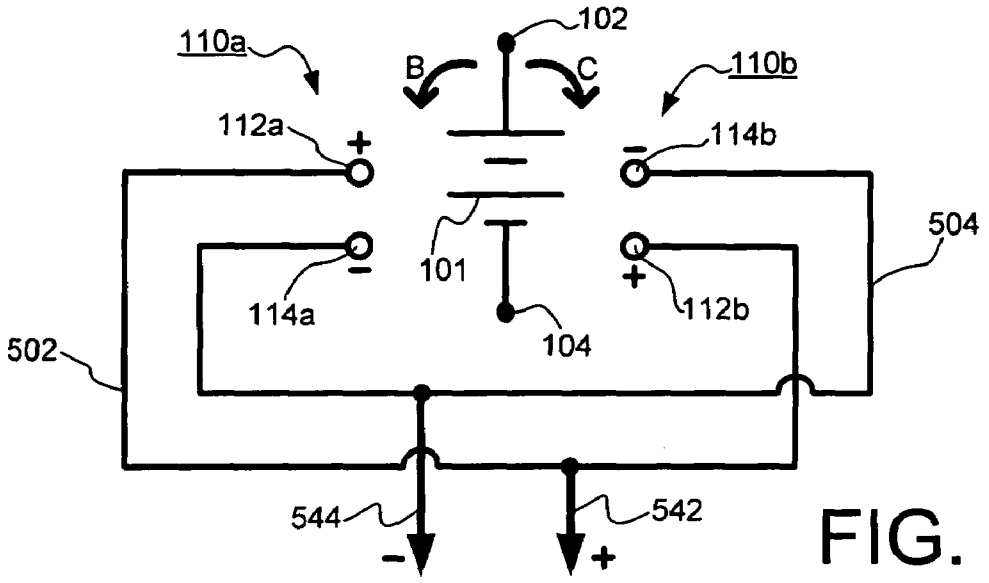

FIG. 6A

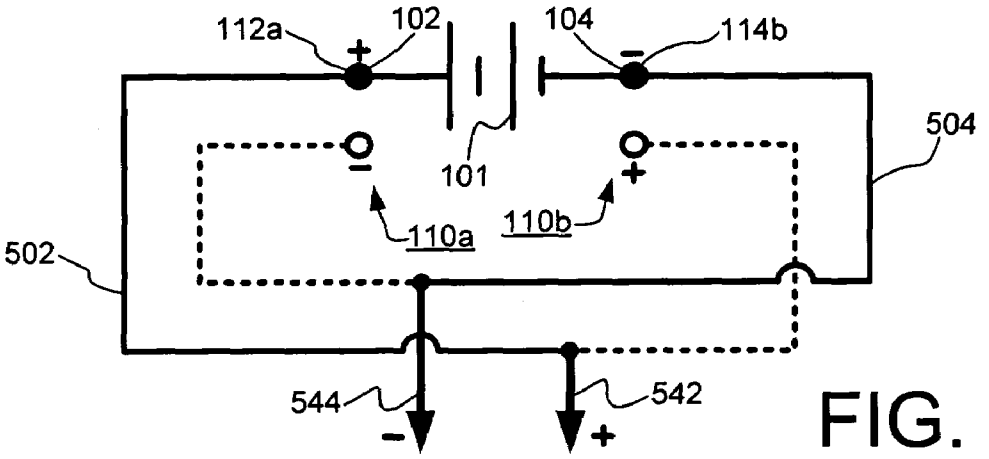

FIG. 6B

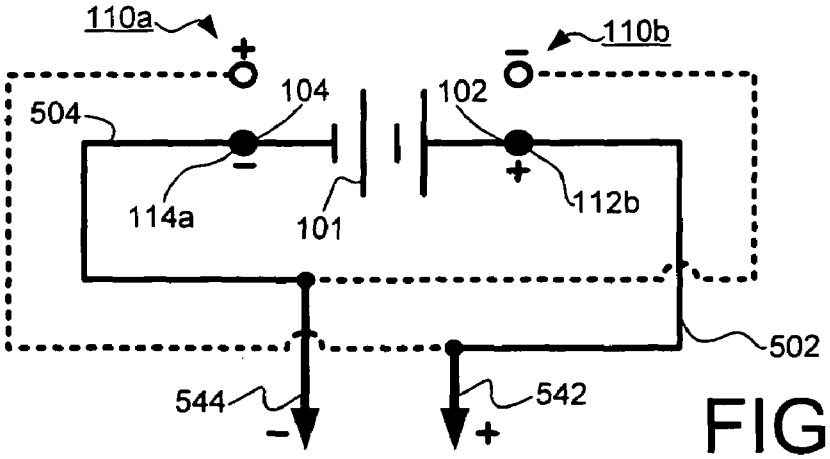

FIG. 6C

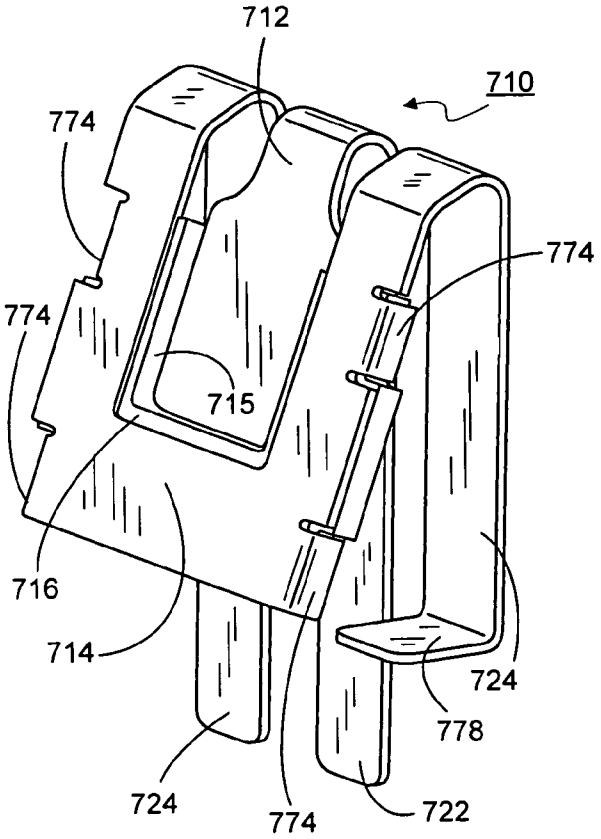
712
710
774
774
774
715
716
714
724
778
724
774
722

FIG. 7A

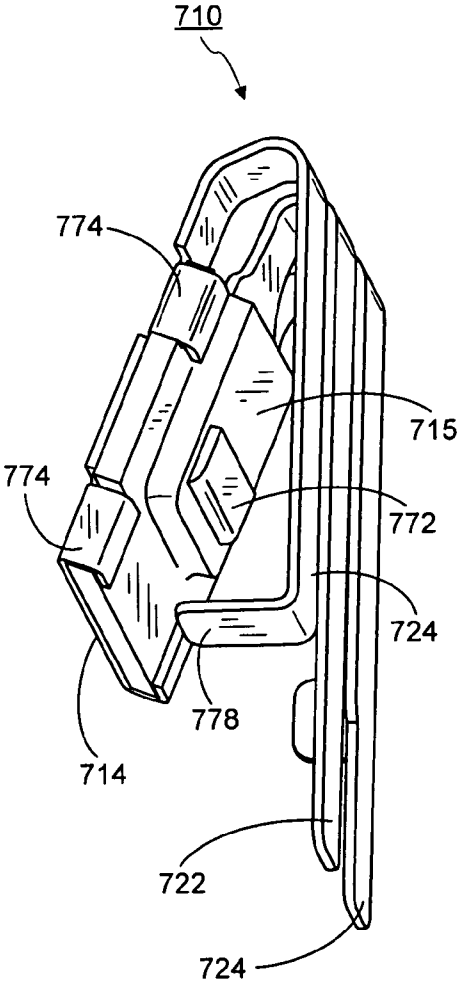
710
774
715
774
772
724
778
714
722
724

FIG. 7B

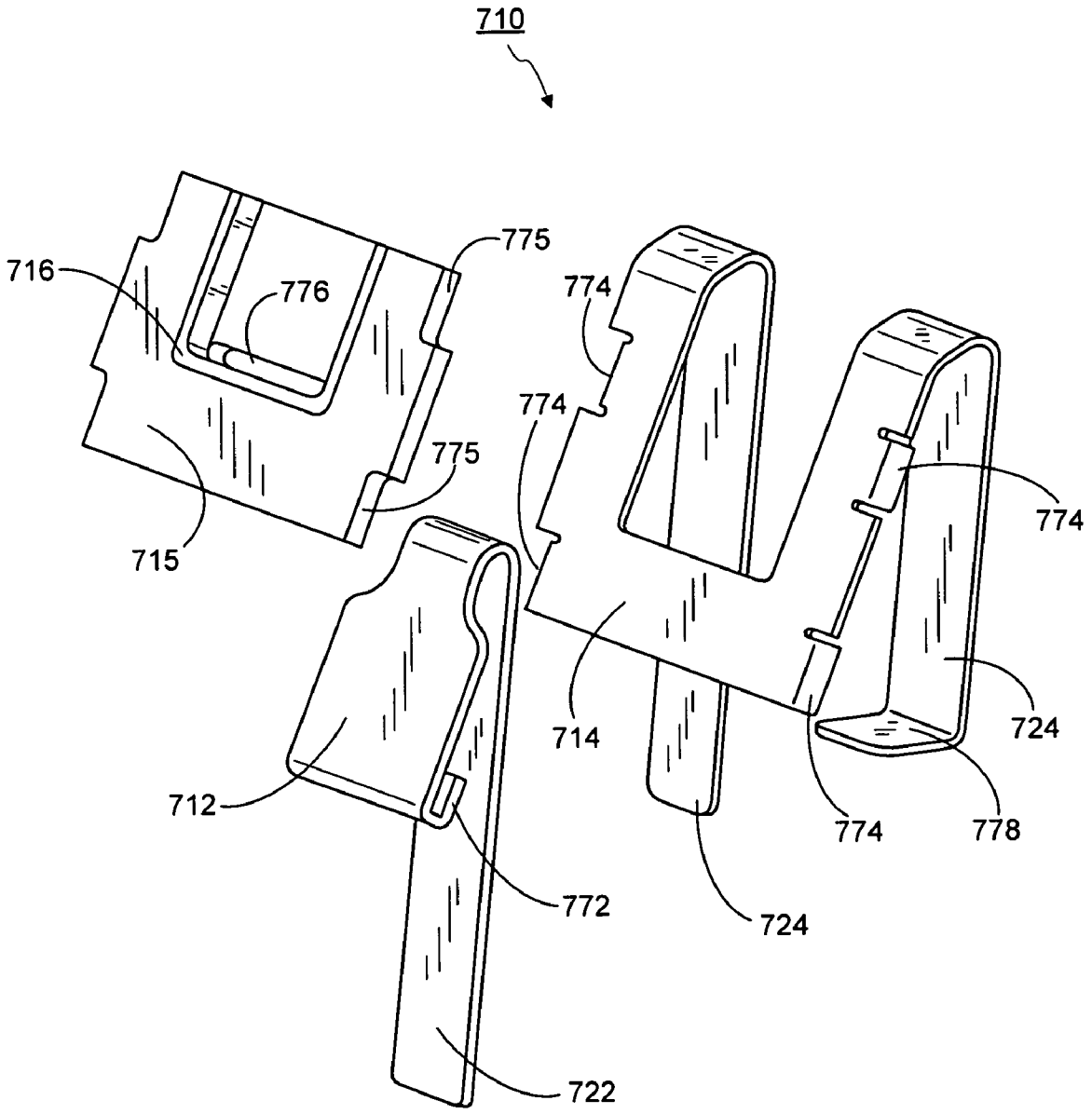
710
716
776
775
775
715
774
774
774
714
724
774
778
724
712
772
722

FIG. 7C

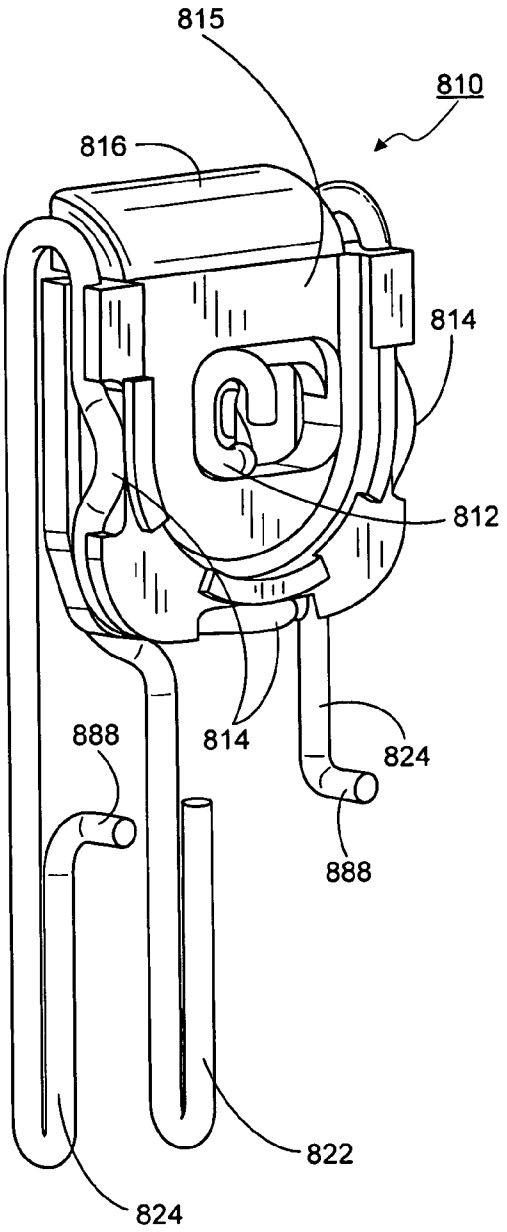
815
810
816
814
812
814
824
888
888
822
824

FIG. 8A

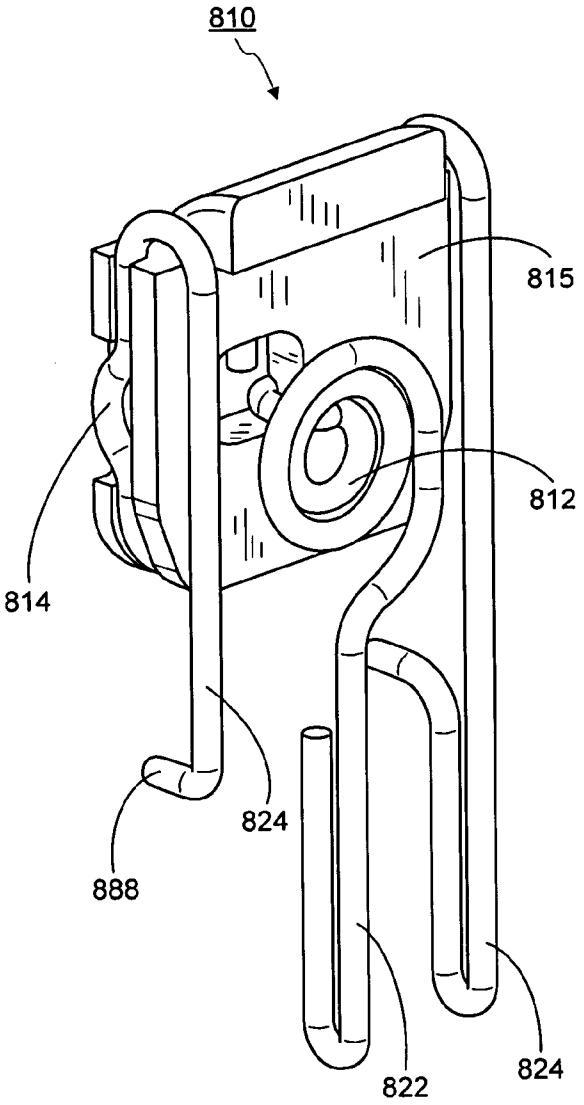
810
815
812
814
824
888
822
824

FIG. 8B

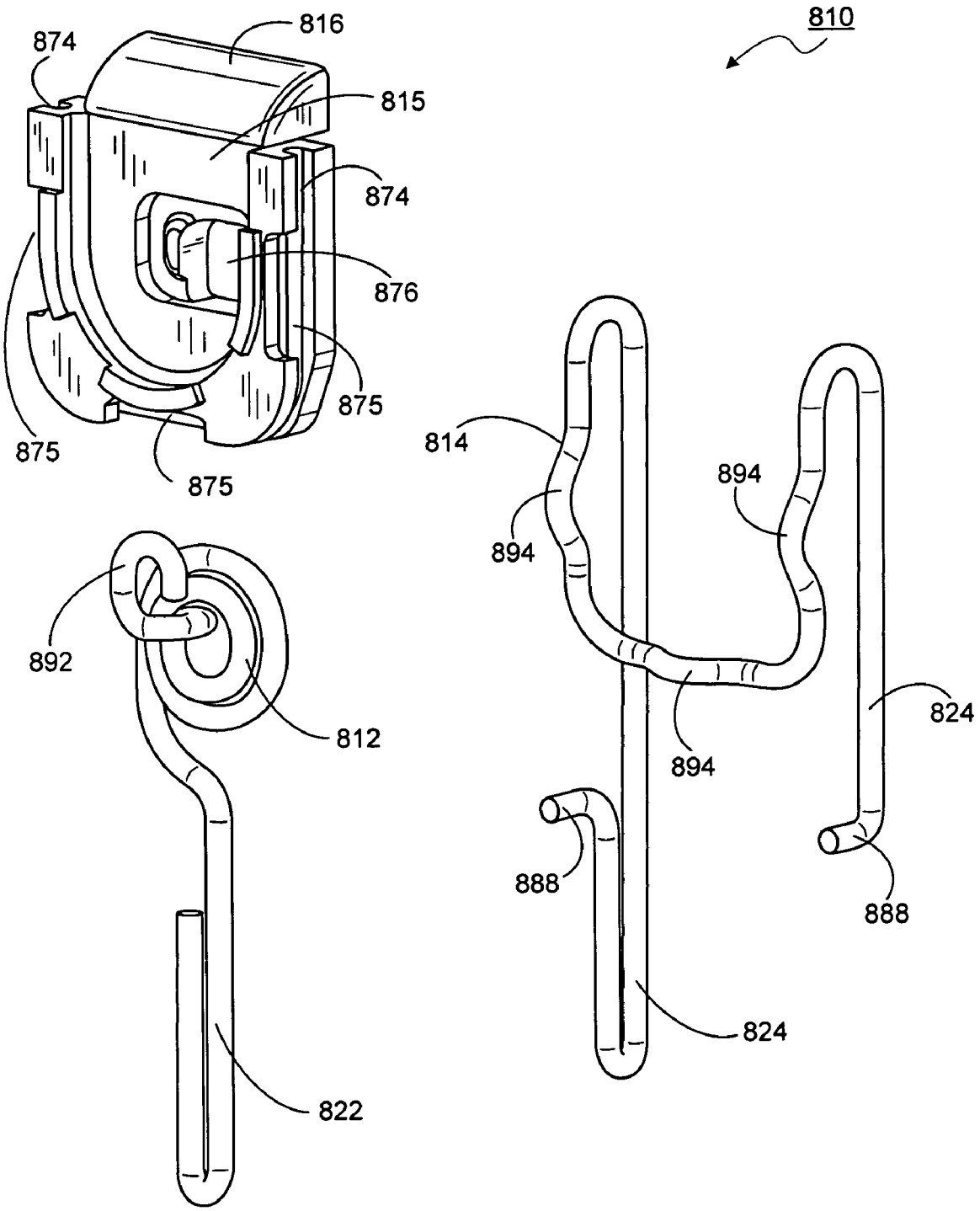
810
816
874
815
874
876
875
875
875
814
894
894
894
892
812
824
888
888
824
822

FIG. 8C

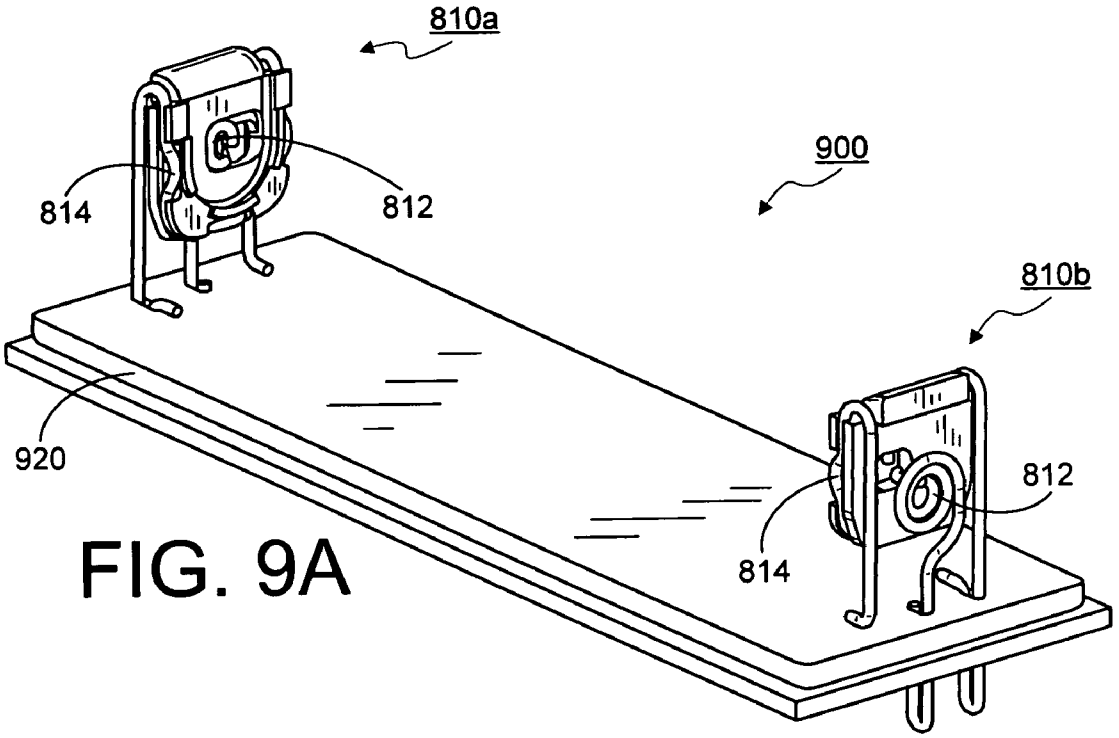

FIG. 9A

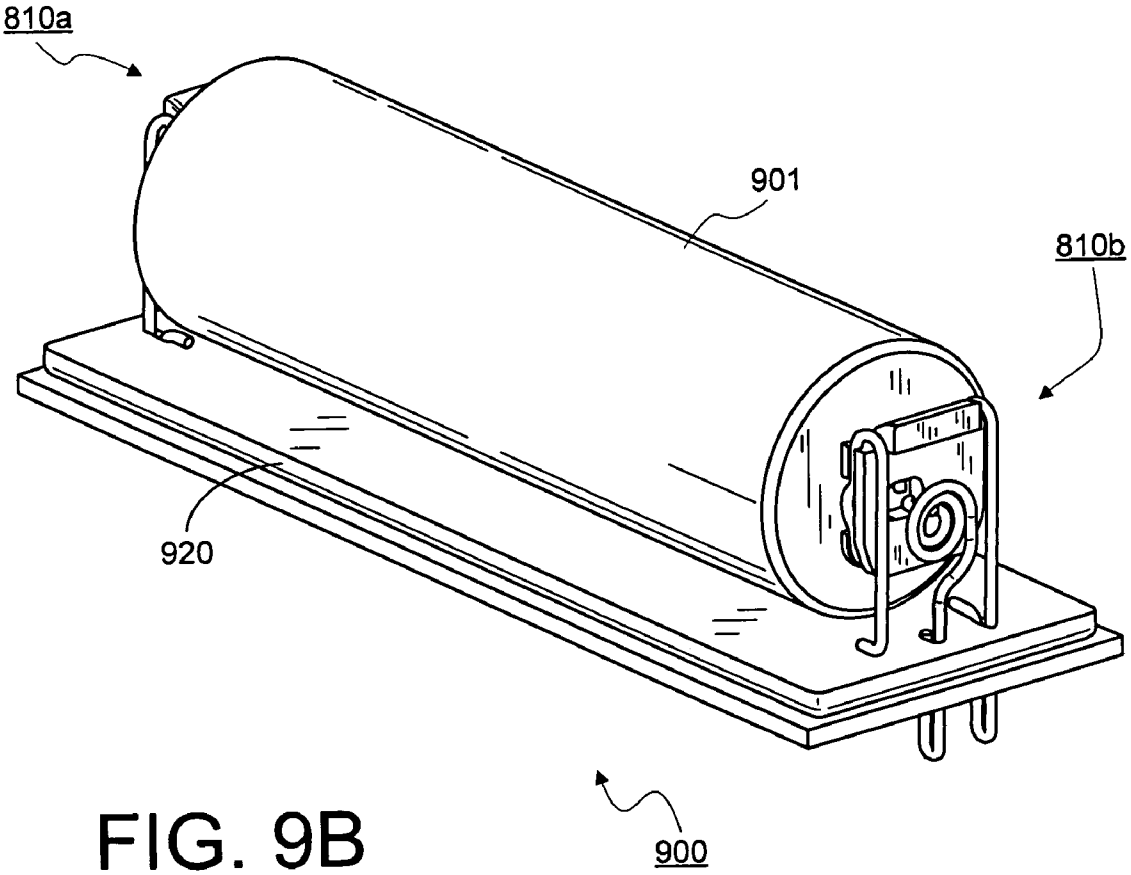

FIG. 9B

ELIMINATING INCORRECT BATTERY INSTALLATION

BACKGROUND

Electronic power batteries must typically be properly installed in the electronic devices or products that make use of such batteries. Proper installation is commonly achieved through the use of written instructions or by using graphical directions on or in the product near or in the battery receiving area, such instructions or directions identifying the proper battery orientation for correct electrical polarity. Users often follow such instructions correctly, but at times the graphics may be difficult to see as they may have been molded directly into or as part of the product housings or the directions may have been printed on what may appear to be increasingly smaller labels. As a result, battery problems and product damage may occur. When batteries are disposed within an electronic product with incorrect polarity, the best case may be that the product simply does not work. In worse cases, batteries can overheat and leak, which can thereby cause permanent damage to the electronics, destroy the product, or cause a fire or explosion. Thus it would be desirable to achieve a solution to protect products from incorrect battery installation.

Some current methods of protection involve preventing electrical contact from occurring based on the battery terminal shape. This approach works, but if a product does not work after installing batteries, the user cannot immediately determine whether the cause is incorrect battery installation or dead or otherwise inoperable batteries. The user must then check that the batteries are installed correctly. Other methods include adding electrical current protection circuitry which may involve use of one or more diodes, rectifiers, transistors or other components. Such electrical circuitry would typically then allow current to only flow in one direction, protecting the product if the batteries are incorrectly installed. Such circuits are, however, known to reduce the supplied voltage and sap battery life by as much as 10-15% or more, and such circuitry may also be fairly expensive.

SUMMARY

Implementations described and claimed herein address the foregoing and other situations by providing a dual-contact assembly and a battery receptacle using two or more dual-contact assemblies. The dual contact assembly and battery receptacle allow batteries to be installed in any configuration, while still delivering electrical current of the proper polarity to the product at substantially all times. A receptacle may typically include two dual-contact assemblies, each of which typically being connected to a substrate in a battery receiving disposition. Each dual-contact assembly may include a positive contact, a negative contact, and an insulating connector disposed between and connecting each of the positive contact and the negative contact in an electrically insulating disposition relative to each other. Typically also, at least one and often both of the dual-contact assemblies is resilient such that at least one of the positive contact, the negative contact and the insulating connector is resiliently movable, the insulating connector nevertheless maintaining the positive and negative contacts in an electrically insulated disposition relative to each other. Further, each of the positive contacts of the respective first and second dual-contact assemblies may be electrically connected to a single positive circuit power connection, and each of the negative contacts of the respective first and second dual-contact assemblies may be electrically connected to a single negative circuit power connection. Many if not virtually any battery-powered device or product could benefit from this arrangement in that it may substantially eliminate improper or incorrect battery installations. Other implementations are also encompassed as described and recited herein.

This Summary is provided to introduce a selection of concepts in a simplified form that are further described below in the Detailed Description. This Summary is not intended to identify key or essential features of the claimed subject matter, nor is it intended to be used to limit the scope of the claimed subject matter. Other features, details, utilities, and advantages of the claimed subject matter will be apparent from the following more particular written Detailed Description of various embodiments and implementations as further illustrated in the accompanying drawings and defined in the appended claims.

BRIEF DESCRIPTIONS OF THE DRAWINGS

FIG. **1**, which includes sub-part FIGS. **1**A and **1**B, provides isometric views of a battery receptacle.

FIG. **2** is a top plan view of a battery receptacle.

FIG. **3** is an isometric view of a resilient dual-contact assembly useful in or as part of a battery receptacle.

FIG. **4**, which includes sub-part FIGS. **4**A and **4**B, provides cross-sectional views of a resilient dual-contact assembly as taken along lines **4**-**4** of FIGS. **1** and **2**.

FIG. **5**, which includes sub-part FIGS. **5**A and **5**B, provides bottom plan views of battery receptacle printed circuit boards useful herewith.

FIG. **6**, which includes sub-part FIGS. **6**A, **6**B and **6**C, provides electrical schematics of a battery receptacle.

FIG. **7**, which includes sub-part FIGS. **7**A, **7**B and **7**C, provides respective isometric and exploded isometric views of an alternative resilient dual-contact assembly.

FIG. **8**, which includes sub-part FIGS. **8**A, **8**B and **8**C, provides respective isometric and exploded isometric views of an alternative resilient dual-contact assembly.

FIG. **9**, which includes sub-part FIGS. **9**A and **9**B, provides isometric views of a battery receptacle.

DETAILED DESCRIPTION

Technology is described herein for battery receptacles which substantially eliminate improper installation of one or more batteries therewithin. Such a battery receptacle allows for a battery to be installed in alternative configurations, while nonetheless providing proper polarity for and supplying an appropriate electrical current to the battery-powered electronic device at all times. As will be readily understood, such technology may be useful in a great many electronic devices which are powered by one or more batteries.

FIG. **1** illustrates an example battery receptacle **100** for a battery-powered electronic device (not shown). Such a receptacle may be disposed in a housing of such a device (neither of which being shown nor further described, here). As illustrated in both sub-part FIGS. **1**A and **1**B, the receptacle **100** may include two dual-contact assemblies **110**, here in FIG. **1** denominated as first and second assemblies **110***a* and **110***b*, which are connected to a substrate **120** which in many instances such as that shown here includes a printed circuit board, or PCB **121**. The substrate **120** and/or the PCB **121** may be used to mechanically hold the first and second assemblies in relative space or in substantially fixed orientation relative to each other. An example battery **101** is shown in dashed lines in FIG. **1**B, and as shown in further detail in FIG.

2 as it might be disposed within a receptacle **100**. These first and second dual-contact assemblies **110** are used one at each respective end of the battery **101**; one assembly **110**, here first assembly **110***a*, providing for surface contact with the protruding positive terminal **102** of a battery and the other assembly **110**, here second assembly **110***b*, providing contact only with the substantially flat negative terminal **104** of the battery **101**. Note, the convention of a protruding positive terminal and a flat negative terminal as used with the example battery **101** here is intended as an example only, and not to limit the scope of the present disclosure or the claims attached hereto. Indeed, a battery could have a positive flat terminal and a negative protruding terminal and still be useful with dual-contact assemblies such as those described here, recognizing the polarity would be reversed from that of the examples depicted here. The relative shapes of the dual-contact assemblies and the parts thereof would be operable in either case, in substantially the same manner as described here with only the electrical polarity differing.

Each of the dual-contact assemblies, again generally designated **110**, see also FIG. **3**, has respective generally designated dual electrical contacts **112** and **114** separated by an insulating connector **115**. As shown for example in FIGS. **1**A and **3**, a positive contact **112**/**112***a* is substantially centrally disposed and recessed within the assembly **110**/**110***a*, and a negative contact **114**/**114***a* is disposed more peripherally and not recessed. As shown in FIG. **1**B, and more in FIGS. **2** and **4**, a protruding positive terminal **102** of a battery **101** may reach into the central area of the contact assembly **110**/**110***a* to make contact with the positive contact **112**/**112***a* while the substantially flat negative terminal surface **104**, see FIG. **2**, of the battery **101** makes contact with the peripheral, non-recessed negative contact **114**/**114***b*. Moreover, at the first dual-contact assembly **110***a* (FIG. **2**, e.g.), while the battery **101** contacts the positive contact **112***a*, it does not touch the negative contact **114***a*. And, at the other dual-contact assembly, i.e., the second dual-contact assembly **110***b* (FIG. **2**, also), the battery **101** contacts the negative contact **114***b*, but does not in any way touch the positive contact **112***b*. Thus, when one battery terminal (positive or negative) is in electrical communication with one of the contacts (positive or negative) of a dual-contact assembly **110**, the other respective contact (negative or positive) of that same dual-contact assembly is not in electrical communication with the battery **101**. This is true as shown best in FIG. **2** for both ends of the battery **101**; the negative terminal **104** of the battery is in contact with the negative contact **114** of one assembly **110**, but not in contact with the positive contact **112** thereof. Meanwhile, the positive terminal **102** of the battery **101** is in contact with the positive contact **112** of the other assembly **110**, but not in contact with the negative contact **114** thereof.

The battery contact assemblies **110** shown in FIGS. **14** (and FIG. **7**, see description, below) are also flat or leaf springs, thus, are resilient dual-contact assemblies. FIGS. **1**A, **3** and **4**A show the springs in a relaxed, undepressed state, while FIGS. **1**B, **2** and **4**B show a battery **101** as inserted with the spring portions of the assemblies **110** depressed, as forced against the spring bias of the respective assemblies **110**. Note, it may be that only one of a pair of first and second dual-contact assemblies is a resilient dual-contact assembly, although, it may be that both of a pair are resilient.

The resiliency or spring quality may be created by a leaf spring functionality, as by having some resiliency in one or the other of the positive or negative contacts **112**, **114**, or even in the insulating member **115**. In many implementations hereof, resiliency will be provided by the bent over arms of one or both of the positive and/or negative contacts **112**, **114**. As shown in FIGS. **3** and **4**, the positive contact **112** includes a base portion **122** and a bent over portion **126**, bent as shown in FIG. **4** at curved portion **127**. The negative contact may similarly include a base portion **124**, or as shown in FIG. **3**, two base portions **124** and **124**, with a bent over portion **128**, as bent at curved portion **129**. In the biased, relaxed position shown in FIGS. **1**A, **3** and **4**A, the relaxed, biased-position of the bend(s) as defined by the curved portions **127** and **129** is at some angle less than about 180 degrees (see e.g., angle A in FIG. **4**A), whereas when in operative contact with a battery, as shown in FIGS. **1**B and **4**B, the angle of the depressed assembly more closely approximates 180 degrees (although there is no absolute limit on the degrees attained whether less than or greater than 180 degrees) (see angle B in FIG. **4**B). The resiliency may be established by or as a characteristic of the material chosen for each of or one or more of the contacts **112** and/or **114**. Certain metals, among other materials, can readily be formed into biased, relaxed state positions such as those shown in FIGS. **1**A, **3** and **4**A, and can be readily depressed to the positions shown in FIGS. **1**B and **4**B, and yet retain operability as electrical contacts for the functionality described herein.

FIG. **4** best shows a battery **101** in the insertion process into operative contact with a resilient dual-contact assembly **110**. In FIG. **4**A, a battery **101** is first brought into contact with a relaxed assembly **110** during insertion. Then, as the battery **101** is pushed downwardly, it also pushes the flat spring as represented by the bent over portions **126** and/or **128** of the contacts **112** and/or **114**. The bent over portions **126** and **128** then deflect toward the respective base portions **122** and **124**. It may be that either one or both of the bent over contacts **112** and **114** actually provide the resiliency to the respective dual-contact assembly, or it may be a non-conductive part, such as the insulating member **115** or otherwise which actually provides the resiliency to the respective dual-contact assembly; however, many implementations would have both bent portions **126** and **128** of respective contacts **112**, **114** move when either is deflected. Thus, electrical communication will be with only one of the contacts **112** or **114** at any time.

The insulating member **115** provides electrical insulation so that no electrical communication will occur between the positive and negative contact members **112**, **114**. Many alternative materials may be used to provide this insulating, non-conductive functionality, many plastics among them. In many implementations, the insulating member **115** may act merely as an insulator; however the insulator **115** may also minimally maintain the contacts in a separated disposition relative to each other. Thus, as either or both of these contacts **112**, **114** act as leaf spring contacts (or as coil springs, see alternative implementation(s), below), then the insulating member may further provide for connecting the contacts **112**, **114** to each other so that they will move together, either as biased toward the relaxed position, or when forced, to the depressed operable position. This connected movability may support further the insulation of each from each other, so that when these contacts move together, they are maintained in a relatively constant distance from each other, neither of the contacts ever be movable closer to the other. Then the insulating member **115** is also an insulating connector **115**, or an insulating connecting member **115**.

Typically, this insulating connector provides a mechanical linking which for the embodiment of FIGS. **1**-**4** may be adhesively, or cohesively or otherwise simply interposed between and connecting the contacts **112**, **114**. Alternative connections are available, two of which being shown in the implementations of FIGS. **7**, **8** and **9**, for example, without any limitation thereto.

In some implementations, as shown for example in FIG. **4**, the connector **115** (or some portion of the dual-contact assembly **110**) may include a ramp portion **116** which may be operable to provide for a smooth engagement with the lip/corner **103** of the battery **101** during insertion and/or extraction of the battery **101** from the receptacle **100**. The ramp **116** provides for little or no sharp or jagged edges which could interfere with and perhaps damage the lip **103** of the battery **101**.

In some alternative production designs, the respective base legs **122**, **124** may be through-hole components which can be soldered after being inserted through a printed circuit board (PCB), or otherwise connected to the electronic circuitry of the electronic device to which it is to be connected. Exemplar base ends **132**, **134** are shown in FIG. **3**, and as they may protrude (even though slightly exaggerated, here) through a substrate **120** and the PCB **121** in FIG. **1**A. Then, shown in FIG. **5**, i.e., in each of the sub-parts FIGS. **5**A and **5**B thereof, is an example of how these base ends **132**, **134** may be connected mechanically and electrically to a PCB **121** in a substrate **120**. As above, mechanically the substrate **120**, which may include or be formed by the PCB **121**, holds the first and second assemblies in relative space or in substantially fixed orientation relative to each other. Principally, in this implementation, the respective positive contacts **112***a*, **112***b* from both of the respective assemblies **110***a*, **110***b* may be disposed in through-hole position relative to the PCB **121**, with each of their respective base ends **132** exposed therethrough. Then, these respective ends **132** can each be connected (as by soldering, e.g.) as shown in FIG. **5** (in both sub-parts FIGS. **5**A and **5**B) to a common trace **502** on the PCB, resulting in a single positive conductor as a power source to the product, i.e., a single positive circuit power connection. Likewise, the negative contacts **114***a*, **114***b* from both assemblies **110***a*, **110***b* can be connected to another common trace **504** via their respective exposed ends **134** on/through the PCB **121**, resulting in a single negative conductor as a ground for the product, or, a single negative circuit power connection. Then, such a production solution could incorporate trace contacts or wire contacts, coiled wire contacts or other conductor configurations. Respective positive and negative trace contacts **542** and **544** are shown in FIG. **5**A, and alternative positive and negative conducting wires **542** and **544** are shown in FIG. **5**B as these might be connected (as by soldering, inter alia) to the respective traces **502**, **504** on the PCB **121**. Note, if a PCB trace connection method is used such as that shown in FIG. **5**A, then the battery contact PCB could also be a portion of the PCB of the entire product, thus only one PCB need be used in the product. The circuit in such a case would not need soldered wires, but could use PCB traces directly on the same PCB. If on the other hand, wire connections **542**, **544** are used, these wires **542**, **544** may then run to and provide all the power connection necessary for any product or device to be powered by the battery or batteries hereof. Note, alternatives to PCB traces may include the use of wire connections, or even extensions of one or more of the respective legs of the respective positive and negative contacts, themselves.

FIG. **6**, which includes sub-part FIGS. **6**A, **6**B and **6**C, displays schematics of how the electrical connections would be achieved using the mechanical connections of FIG. **5**. In FIG. **6**A, the electrical traces **502** and **504** are schematically shown as these are connected to the respective wire connections **542**, **544** going to the electrical circuitry (not shown) of the device (also not shown) to be powered by the battery **101**. A battery **101** is also shown schematically, and not connected to the circuitry in FIG. **6**A. Also shown here are the respective dual-contact assemblies **110***a*, **110***b* with their respective positive contacts **112***a*, **112***b* and negative contacts **114***a*, **114***b*. The battery **101** is shown in a relatively neutral position in FIG. **6**A, the respective positive and negative terminals **102**, **104** not touching any of the contacts **112**, **114** of the assemblies **110**. Further indications are provided for the rotation of the battery either in direction B toward the connection shown in FIG. **6**B, or in direction C toward the connection shown in FIG. **6**C.

In FIG. **6**B, the battery **101** is shown as it would be connected with the positive terminal **102** thereof contacting the positive contact **112***a* of the dual contact assembly **110***a*, while the negative terminal **104** of the battery **101** is contacting the negative contact **114***b* of the dual contact assembly **110***b*. A closed electrical path is shown in FIG. **6**B by the solid line portions of the respective traces **502**, **504**, which thereby provide for electrical current flow to the respective positive and negative wire connections **542**, **544**. The unused contacts are still electrically connected to the ones that are used, but no current flows through the dashed lines since they do not form a closed circuit.

The substantially opposite orientation of the battery and current flow is shown in FIG. **6**C, where the battery **101** is shown as it would be rotated in the C direction of FIG. **6**A and thereby connected with the positive terminal **102** thereof contacting the positive contact **112***b* of the dual contact assembly **110***b*, while the negative terminal **104** of the battery **101** is in contact with the negative contact **114***a* of the dual contact assembly **110***a*. A closed electrical path is shown in FIG. **6**C, contrary to that of FIG. **6**B, by the solid line portions of the respective traces **502**, **504**, which thereby provide for electrical current flow to the respective positive and negative wire connections **542**, **544**. Here again, the unused contacts are still electrically connected to the ones that are used, but no current would flow through the dashed lines since they do not form a closed circuit. Note, there may be circumstances where it is desirable to not connect the respective positive and negative contacts by common traces or other similar connections, and rather activate one circuit when the battery is inserted in one orientation, and activate a different circuit then the battery is inserted in the opposite orientation.

According to this technology, a battery receptacle or battery compartment having a battery receptacle is set forth which provides for insertion of a battery in either of two opposing orientations, yet provides for appropriate current flow in either orientation. This substantially eliminates improper or incorrect installation of a battery. The spring functionality of one or both dual-contact assemblies then provides for containing batteries of various sizes within a certain range of tolerances. The spring functionality may also or alternatively provide for securely retaining the battery therewithin and providing continuous electrical contact and proper polarity current to the electrical device regardless of the orientation or often in spite of movement of the electrical device and the battery receptacle and battery therewithin.

Many typical uses may be with cylindrical or rectangular prism or other shaped batteries having a positive terminal with a protrusion at one end of the battery and a substantially flat surface negative terminal elsewhere on the battery, as at the opposite end of the battery. The dual-contact assemblies would then be disposed as shown in FIGS. **1** (and **9**, described below) at opposing ends of a receptacle and a substrate thereof. Examples of such batteries may include, for example, those referred to as A, AA, AAA, AAAA, C, D or others of similar such sizes or shapes. Further examples might include those batteries known as coin or button batteries, inter alia. Note, though typical use might be with positive protrusion/

flat negative terminal batteries; the present devices and methods may be used with batteries having flat positive terminals and protruding negative terminals. The polarity of the circuitry would only be reversed. Moreover, though typical use might be with batteries having such terminals on opposing ends of a battery, these battery contacts need not be on opposite ends of the battery, but rather with terminals on the same side of the battery, or in other relative dispositions. Two dual-contact assemblies side by side could easily be adapted to accommodate a 9V or like type battery with terminals on the same side of the battery because one terminal may be made with a protrusion with a smaller diameter than the other terminal, just like a conventional double A ("AA") battery. Note further that conventional 9V batteries may have snap features not addressed hereby; although, addressed are 9V or like batteries which may have terminals on the same end with differing geometries such as shown and described.

As introduced above, the manufacture and/or joining of the respective parts of each dual-contact assembly involve an adhesive or cohesive approach, or other high volume joining techniques may be used for manufacture, such as heat-staking, injection molding, and/or mechanical bending of metal, or any other joining methods, including ultrasonic welding, or spin welding, inter alia. Some more detailed descriptions of alternative implementations of such battery receptacles and/or dual-contact assemblies useful therein, particularly with alternative formation approaches, are set forth below.

FIG. **7**, including sub-part FIGS. **7**A, **7**B and **7**C, provides isometric views of an alternative dual-contact assembly **710**. This dual-contact assembly **710** includes respective positive and negative contacts **712** and **714**, not unlike those of the implementations of FIGS. **1**-**4**. Disposed between these contacts is a connector **715** which can provide insulation and connection functionality like that of the previously-described insulators. Also shown are the respective positive and negative conductive legs **722** and **724** of the contacts **712**, **714**. Additionally shown in this implementation are the connecting crimping member **772** and **774** which, during manufacture and use, secure the connection of the respective contacts **712** and **714** to the insulating connector **715**. The view of FIG. **7**C further particularly shows the respective crimping members **772**, **774**, as well as the respective receiving cutouts **775** and **776** formed in the connector **715**. The receiving cutouts **775** may be reduced areas in edges of the connector **715**, where the cutout **776** may be a through hole in the connector **715** to receive an insertion of the crimping member **772** of the positive contact **712**. Note, such a connector **715** may be of a plastic or other insulating material, and may be molded (as by injection molding) into the form shown, or otherwise made, as by etching or other post-molding shape-forming methods. The respective contacts **712**, **714** would typically be one-piece conductive materials formed to the shapes shown in FIG. **7**, and may in many implementations be of a resilient metal, bent to the forms shown, and resilient to be deformable, yet biased to return to the unforced positions shown.

Also shown in FIG. **7** are alternative respective foot members **778** which may be useful for positioning the dual-contact assembly in/on a substrate, such as the substrate **120** of FIG. **1**. One or more of such members **778** may be used for this purpose, and these may take various forms, as for example the member **778** which may rest on the substrate without providing a through-hole disposition of that respective leg **724**. Another alternative feature shown in FIG. **7** is the ramp **716** formed in the connector **715** to provide the unimpeded engagement function as did the ramp **116** of the implementation of FIG. **4**.

FIG. **8** provides views of another alternative dual-contact assembly **810**. In this assembly **810**, a coil spring positive contact **812** may be is used to mechanically bias the contacts relative to the battery to be connected therewith. In this version, the negative contact **814** may also provide a spring quality, or may merely rely upon the coil spring of the positive contact **812** for the biasing effect. The electrically insulating connector **815** hereof, would, as above, provide both the connecting function for connecting the positive and negative electrical contacts **812**, **814** together, as well as insulating them from any electrical communication between these contacts. An alternative feature also shown in FIG. **8** is the ramp **816** formed in the connector **815** to provide the unimpeded engagement function as did the ramps **116** and **716** of the respective implementations of FIGS. **4** and **7**.

Further, positive and negative conductive legs **822** and **824** are also shown in FIG. **8**, with the foot portions **888** of negative legs **824**, for positioning relative to a substrate. As shown best in FIG. **8**C, the respective positive and negative contacts **812**, **814** and their corresponding conductive legs **822**, **824** may be made of single continuous pieces of conductive material, such as certain metals, e.g, steel, spring steel, plated spring steel, beryllium, copper, among others. Moreover, the respective positive and negative contacts may be formed with one or more respective protruding portions **892**, **894**, which would provide sufficient protrusion relative to the connection member **815** to make contact with a battery brought into engagement therewith. These protrusions may coact with respective cutouts **876** and **875** in the connection member to also fix the respective contacts **812** and **814** with respect to the connection member. Crimping members or grooves **874** may also be provided in the connection member **815** to receive and hold the contacts **812**, **814**. Note, such a connector **815** may be of a plastic or other insulating material, and may be molded (as by injection molding) into the final form shown, or otherwise made, as by etching or other post-molding shape-forming methods. The respective contacts **812**, **814** would typically be one-piece conductive materials formed to the shapes shown in FIG. **8**, and may in many implementations be of a resilient, spring forming metal, such as wire or wire coil material, pre-bent to the forms shown, and resilient to be deformable, yet biased to return to the unforced positions shown.

A resulting receptacle **900** is shown in FIG. **9**, which includes sub-part FIGS. **9**A and **9**B. Two opposing dual-contact assemblies **810***a* and **810***b* are shown as attached to a substrate **920**. The respective contacts **812**, **814** are shown with and without a battery **901** disposed between them. Note, the contact assemblies **810***a* and **810***b* are shown in a state which may be compressed state in FIG. **9**A (not unlike the compressed state shown with the battery in FIG. **9**B), although such contact assemblies may rather exhibit an angularly un-forced or un-compressed state not unlike that of the alternative embodiments of FIGS. **1**A, **3**, **4**A and **7**, inter alia.

The result of each of these implementations is, as above, and as described herein, one or more dual-contact assemblies for use in or with a battery receptacle to allow batteries to be installed in any configuration, while still delivering predictable electrical current of the proper polarity at all times to the electrical device to be powered thereby. Elimination or substantial elimination of incorrect battery installation would thereby result.

A method for substantially eliminating incorrect battery installation may thus include employing two dual-contact assemblies, each of the dual-contact assemblies being disposed in a battery receiving disposition, each of the dual-contact assemblies including a positive contact, a negative

contact, and an insulating connector disposed between and connecting each of the positive contact and the negative contact in an electrically insulating disposition relative to each other; wherein at least one of the first and second dual-contact assemblies is an inherently resilient dual-contact assembly; inserting, in any contact orientation, a battery between two opposing dual-contact assemblies; engaging the positive contact of one of the dual-contact assemblies with the positive terminal of the battery; and, engaging the negative contact of the other one of the dual-contact assemblies with the negative terminal of the battery.

The above specification provides a complete description of the structure and use of example implementations of the presently-described technology. Although various implementations of this technology have been described above with a certain degree of particularity, or with reference to one or more individual implementations, those skilled in the art could make numerous alterations to the disclosed implementations without departing from the spirit or scope of the technology hereof. Since many implementations can be made without departing from the spirit and scope of the presently described technology, the appropriate scope resides in the claims hereinafter appended. In particular, it should be understood that the described technology may be employed in virtually all, if not indeed, all electrical devices which receive power for whatever purpose from one or more batteries. Other implementations are therefore contemplated. Furthermore, it should be understood that any operations may be performed in any order, unless explicitly claimed otherwise or a specific order is inherently necessitated by the claim language. It is intended that all matter contained in the above description and shown in the accompanying drawings shall be interpreted as illustrative only of particular implementations and are not limiting to the embodiments shown. Changes in detail or structure may be made without departing from the basic elements of the present technology as defined in the following claims.

Accordingly, what is claimed is:

1. A battery receptacle comprising:

a substrate; and

first and second dual-contact assemblies, each of the first and second dual-contact assemblies being connected to the substrate in battery receiving disposition, each of said first and second dual-contact assemblies including:

a positive contact,

a negative contact, and

an insulating connector disposed between and connecting each of the positive contact and the negative contact in an electrically insulating disposition relative to each other;

wherein at least one of the first and second dual-contact assemblies is a resilient dual-contact assembly such that the positive contact, the negative contact and the insulating connector of the resilient dual-contact assembly are resiliently movable, the positive and negative contacts of the resilient dual-contact assembly comprising respective base portions contacting the substrate and respective bent portions biased away from the respective base portions, the insulating connector maintaining the positive and negative contacts of the resilient dual-contact assembly in an electrically insulated disposition relative to each other when the respective bent portions of the positive and negative contacts of the resilient dual-contact assembly are deflected toward the respective base portions of the positive and negative contacts of the resilient dual-contact assembly; and

wherein each of the positive contacts of the respective first and second dual-contact assemblies is electrically connected to a positive circuit power connection, and each of the negative contacts of the respective first and second dual-contact assemblies is electrically connected to a negative circuit power connection.

2. A battery receptacle according to claim **1** wherein the first and second dual-contact assemblies are disposed in opposing relationship for receiving a battery having a positive terminal on one end and a negative terminal on an opposing end.

3. A battery receptacle according to claim **2** wherein each dual-contact assembly provides both a positive contact and negative contact at each respective end of the battery to be engaged thereby.

4. A battery receptacle according to claim **1** wherein the positive contact of at least one of the first and second dual-contact assemblies is recessed from the negative contact.

5. A battery receptacle according to claim **1** wherein the positive contact of at least one of the first and second dual-contact assemblies is recessed from the negative contact, the positive contact thereby disposed to receive a protruding positive terminal of a battery.

6. A battery receptacle according to claim **1** wherein the negative contact of at least one of the first and second dual-contact assemblies is adapted to engage a substantially flat negative terminal surface of a battery.

7. A battery receptacle according to claim **1** wherein both of the first and second dual-contact assemblies are each resilient, thereby forming first and second resilient dual-contact assemblies such that for each of the respective first and second resilient dual-contact assemblies each of the respective positive contacts, the respective negative contacts and the respective insulating connectors of the respective first and second resilient dual-contact assemblies are resiliently movable, the respective insulating connectors maintaining the respective positive and negative contacts of the respective first and second resilient dual-contact assemblies in an electrically insulated disposition relative to each other.

8. A battery receptacle according to claim **1** wherein the resilient dual-contact assembly is formed with at least one inherent flat spring, leaf spring, wire spring, or coil spring.

9. A battery receptacle according to claim **8** wherein the at least one inherent flat spring, leaf spring, wire spring, or coil spring forms at least one of the positive contact, the negative contact and the insulating connector of the resilient dual-contact assembly.

10. A battery receptacle according to claim **8** wherein the at least one inherent flat spring, leaf spring, wire spring, or coil spring is formed from a conductive material.

11. A battery receptacle according to claim **8** wherein the at least one inherent flat spring, leaf spring, wire spring, or coil spring is formed from a unitary piece.

12. A battery receptacle according to claim **1** wherein the insulating connector of at least one of the first and second dual-contact assemblies is a plastic insulator.

13. A battery receptacle according to claim **1** wherein the insulating connector, the positive contact and the negative contact of at least one of the first and second dual-contact assemblies are mechanically joined using an adhesive, cohesive, heat staking, injection molding, mechanical bending of material, ultrasonic welding, or spin welding.

14. A battery receptacle according to claim **1** wherein the insulating connector of at least one of the first and second dual-contact assemblies includes a ramp portion to aid in battery insertion and prevent damage to lip of battery.

15. A battery receptacle according to claim **1** wherein each of the positive contacts of the respective first and second dual-contact assemblies is directly electrically coupled to

each other and to a single positive circuit power connection, and each of the negative contacts of the respective first and second dual-contact assemblies is directly electrically coupled to each other and to a single negative circuit power connection.

16. A battery receptacle according to claim **1** wherein each of the positive contacts of the respective first and second dual-contact assemblies is directly electrically coupled to each other and to a single positive circuit power connection via connection of the respective positive contacts themselves, wires, or PCB traces, and each of the negative contacts of the respective first and second dual-contact assemblies is directly electrically coupled to each other and to a single negative circuit power connection via connection of the respective negative contacts themselves, wires, or PCB traces.

17. A battery receptacle according to claim **1** wherein the positive contacts of the respective first and second dual-contact assemblies are not directly electrically coupled to each other and are each respectively connected to a discrete separate circuit, and each of the negative contacts of the respective first and second dual-contact assemblies are not directly electrically coupled to each other and are each respectively connected to a discrete separate circuit.

18. An inherently resilient dual-contact assembly for use in a battery receptacle, the dual-contact assembly comprising:

a positive contact,

a negative contact, and

an insulating connector disposed between and connecting each of the positive contact and the negative contact in an electrically insulating disposition relative to each other;

wherein the positive contact is recessed from the negative contact to receive a protruding positive terminal of a battery;

wherein the negative contact is adapted to engage a substantially flat negative terminal surface of a battery; and

wherein the positive contact, the negative contact and the insulating connector are resiliently movable, the positive and negative contacts of the resilient dual-contact assembly comprising respective base portions and respective bent portions biased away from the respective base portions, the insulating connector maintaining the positive and negative contacts of the resilient dual-contact assembly in an electrically insulated disposition relative to each other when the respective bent portions of the positive and negative contacts of the resilient dual-contact assembly are deflected toward the respective base portions of the positive and negative contacts of the resilient dual-contact assembly.

19. A dual-contact assembly according to claim **18** further comprising at least one inherent flat spring, leaf spring, wire spring, or coil spring.

20. A method for substantially eliminating incorrect battery installation comprising:

inserting, in any contact orientation, a battery between two opposing dual-contact assemblies, each of the dual-contact assemblies being disposed in a battery receiving disposition, each of the dual-contact assemblies including a positive contact, a negative contact, and an insulating connector disposed between and connecting each of the positive contact and the negative contact in an electrically insulating disposition relative to each other; wherein at least one of the first and second dual-contact assemblies is an inherently resilient dual-contact assembly such that the positive contact, the negative contact and the insulating connector are resiliently movable, the positive and negative contacts of the resilient dual-contact assembly comprising respective base portions and respective bent portions biased away from the respective base portions, the insulating connector maintaining the positive and negative contacts of the resilient dual-contact assembly in an electrically insulated disposition relative to each other when the respective bent portions of the positive and negative contacts of the resilient dual-contact assembly are deflected toward the respective base portions of the positive and negative contacts of the resilient dual-contact assembly;

engaging the positive contact of one of the dual-contact assemblies with the positive terminal of the battery; and,

engaging the negative contact of the other one of the dual-contact assemblies with the negative terminal of the battery.

* * * * *