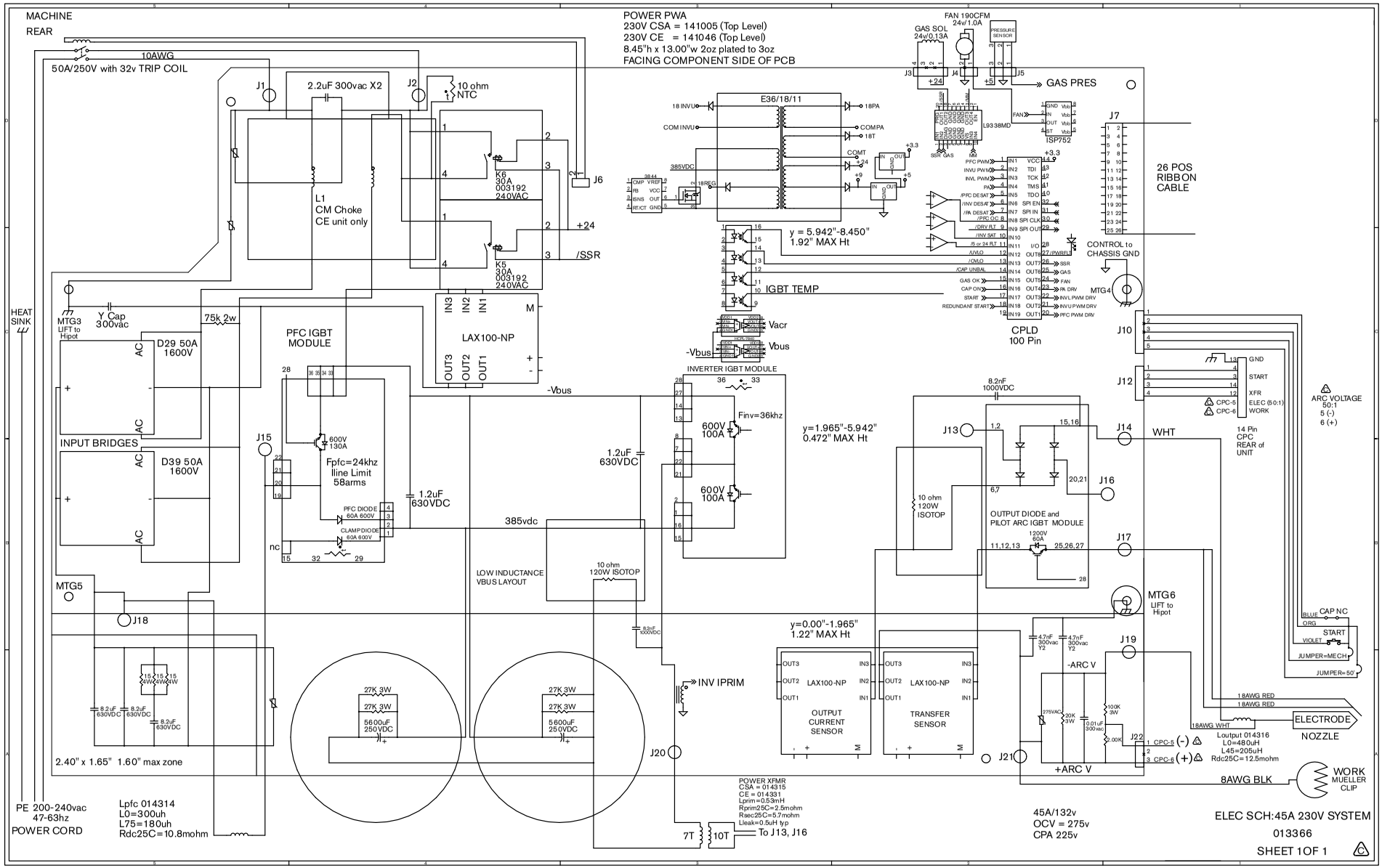
MACHINE
REAR
10AWG
50A/250V with 32v TRIP COIL
POWER PWA
230V CSA = 141005 (Top Level)
230V CE = 141046 (Top Level)
8.45"h x 13.00"w 2oz plated to 3oz
FACING COMPONENT SIDE OF PCB
FAN 190CFM
24v/1.0A
GAS SOL
24v/0.13A
PRESSURE SENSOR
GAS PRES
J1
2.2uF 300vac X2
J2
10 ohm
NTC
J3
J4
J5
+24
+5
E36/18/11
18 INVU
COM INVU
18PA
COMPA
18T
COMT
385VDC
18REG
L93 38MD
ISP752
FAN
SSR GAS
MM
J7
26 POS
RIBBON
CABLE
L1
CM Choke
CE unit only
K6
30A
003192
240VAC
K5
30A
003192
240VAC
J6
+24
/SSR
y = 5.942"-8.450"
1.92" MAX Ht
IGBT TEMP
CONTROL to
CHASSIS GND
MTG4
CPLD
100 Pin
HEAT
SINK
MTG3
LIFT to
Hipot
Y Cap
300vac
75k 2w
D29 50A
1600V
PFC IGBT
MODULE
LAX100-NP
IN3
IN2
IN1
M
OUT3
OUT2
OUT1
Vacr
Vbus
-Vbus
INVERTER IGBT MODULE
J10
J12
GND
START
XFR
ELEC (50:1)
WORK
CPC-5
CPC-6
14 Pin
CPC
REAR of
UNIT
ARC VOLTAGE
50:1
5 (-)
6 (+)
INPUT BRIDGES
D39 50A
1600V
J15
600V
130A
Fpfc=24khz
Iline Limit
58arms
PFC DIODE
60A 600V
CLAMP DIODE
60A 600V
1.2uF
630VDC
1.2uF
630VDC
600V
100A
Finv=36khz
y=1.965"-5.942"
0.472" MAX Ht
8.2nF
1000VDC
J13
J14
WHT
J16
10 ohm
120W
ISOTOP
OUTPUT DIODE and
PILOT ARC IGBT MODULE
1200V
60A
J17
385vdc
LOW INDUCTANCE
VBUS LAYOUT
10 ohm
120W ISOTOP
MTG5
J18
MTG6
LIFT to
Hipot
y=0.00"-1.965"
1.22" MAX Ht
CAP NC
START
JUMPER=MECH
JUMPER=50'
J19
-ARC V
+ARC V
LAX100-NP
OUTPUT
CURRENT
SENSOR
TRANSFER
SENSOR
INV IPRIM
27K 3W
5600uF
250VDC
J20
J21
J22
CPC-5
CPC-6
18AWG RED
18AWG WHT
ELECTRODE
NOZZLE
Loutput 014316
L0=480uH
L45=205uH
Rdc25C=12.5mohm
8AWG BLK
WORK
MUELLER
CLIP
2.40" x 1.65" 1.60" max zone
PE 200-240vac
47-63hz
POWER CORD
Lpfc 014314
L0=300uh
L75=180uh
Rdc25C=10.8mohm
POWER XFMR
CSA = 014315
CE = 014331
Lprim=0.53mH
Rprim25C=2.5mohm
Rsec25C=5.7mohm
Lleak=0.5uH typ
7T
10T
To J13, J16
45A/132v
OCV = 275v
CPA 225v
ELEC SCH:45A 230V SYSTEM
013366
SHEET 1OF 1