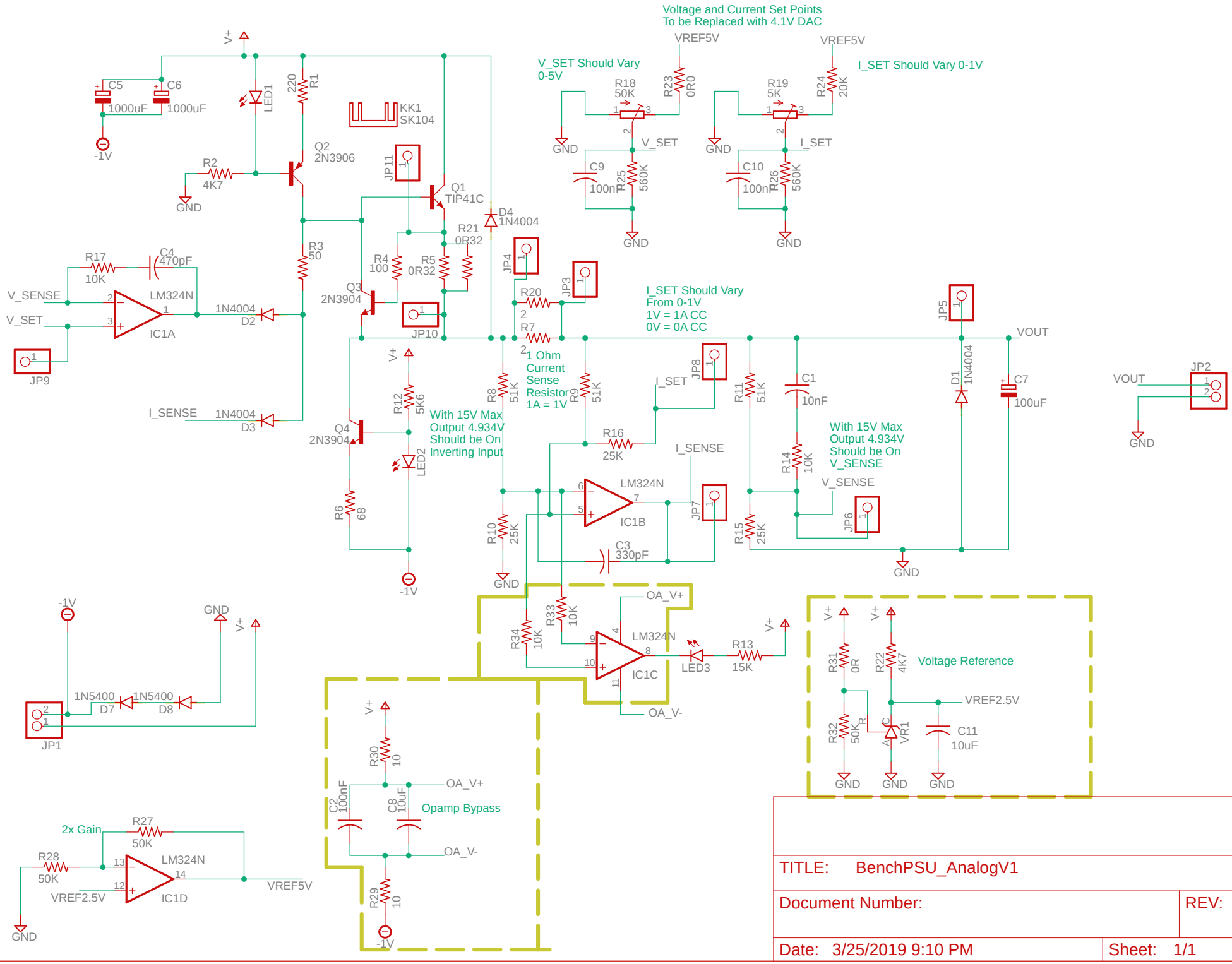
Voltage and Current Set Points
To be Replaced with 4.1V DAC
V_SET Should Vary
0-5V
I_SET Should Vary 0-1V
VREF5V
R18
50K
R19
5K
R23
0R0
R24
20K
V_SET
I_SET
C9
100nF
C10
100nF
R25
560K
R26
560K
GND
C5
1000uF
C6
1000uF
-1V
V+
LED1
220
R1
KK1
SK104
Q2
2N3906
R2
4K7
JP11
Q1
TIP41C
D4
1N4004
R21
0R32
R3
50
R4
100
R5
0R32
Q3
2N3904
JP10
JP4
JP3
R17
10K
C4
470pF
V_SENSE
V_SET
LM324N
IC1A
1N4004
D2
JP9
I_SENSE
1N4004
D3
Q4
2N3904
R12
5K6
LED2
R6
68
R20
2
R7
2
1 Ohm
Current
Sense
Resistor
1A = 1V
I_SET Should Vary
From 0-1V
1V = 1A CC
0V = 0A CC
JP5
VOUT
R8
51K
R9
51K
JP8
I_SET
R11
51K
C1
10nF
D1
1N4004
C7
100uF
VOUT
JP2
With 15V Max
Output 4.934V
Should be On
Inverting Input
R16
25K
I_SENSE
R14
10K
With 15V Max
Output 4.934V
Should be On
V_SENSE
V_SENSE
LM324N
IC1B
JP7
JP6
R10
25K
C3
330pF
R15
25K
OA_V+
R33
10K
R34
10K
LM324N
IC1C
LED3
R13
15K
OA_V-
Voltage Reference
R31
0R
R22
4K7
VREF2.5V
R32
50K
VR1
C11
10uF
-1V
GND
V+
1N5400
D7
1N5400
D8
JP1
R30
10
C2
100nF
C8
10uF
Opamp Bypass
OA_V+
OA_V-
R29
10
2x Gain
R27
50K
R28
50K
LM324N
IC1D
VREF2.5V
VREF5V
TITLE: BenchPSU_AnalogV1
Document Number:
REV:
Date: 3/25/2019 9:10 PM
Sheet: 1/1