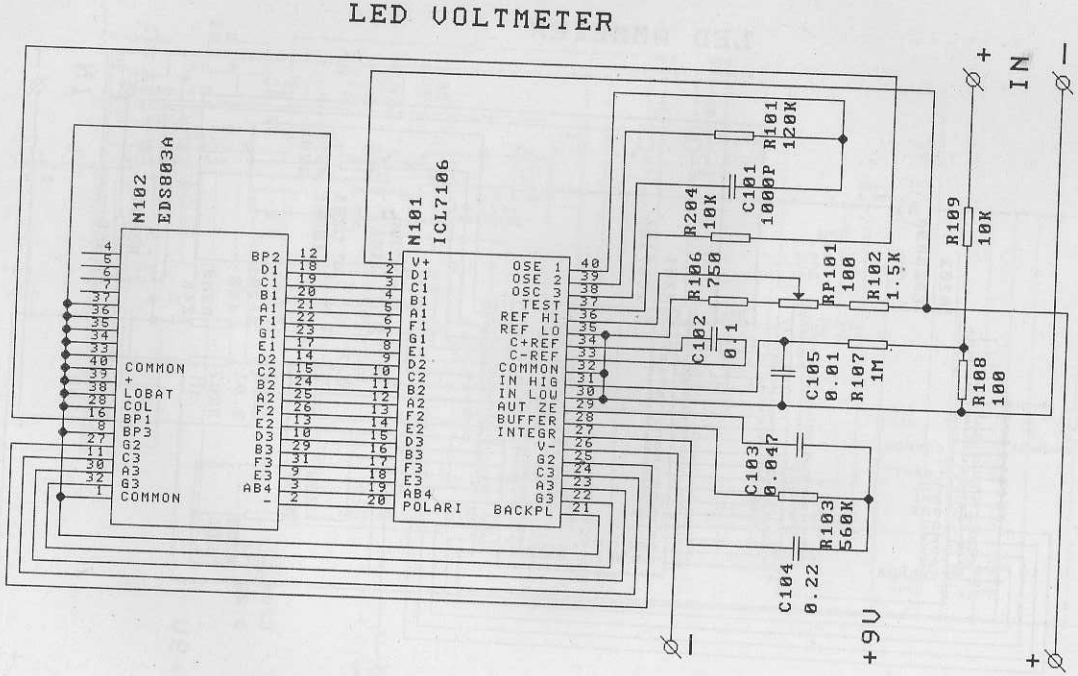
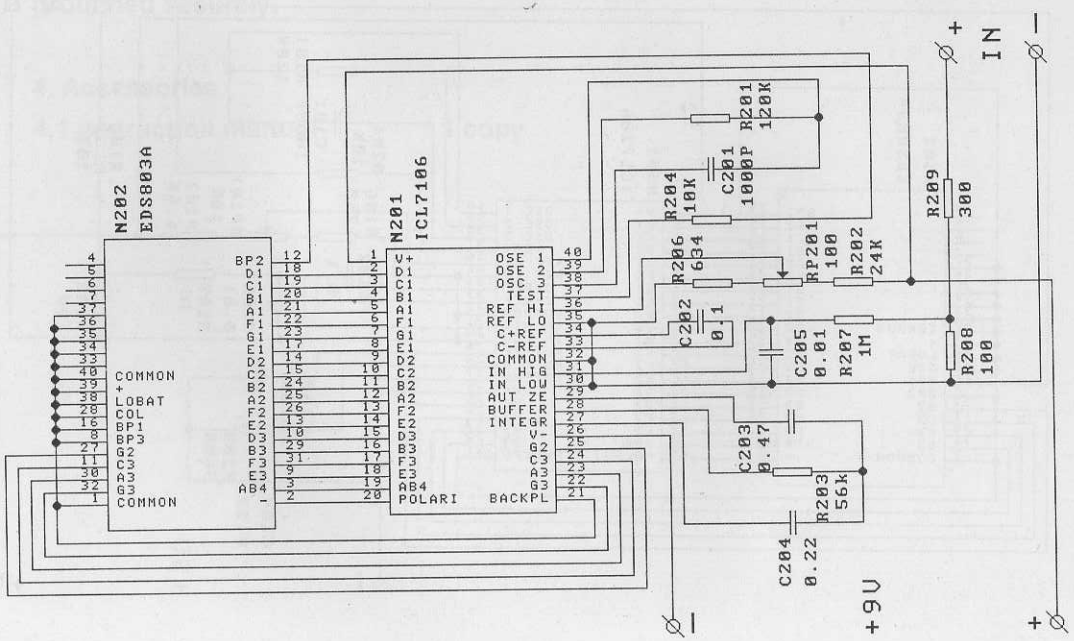
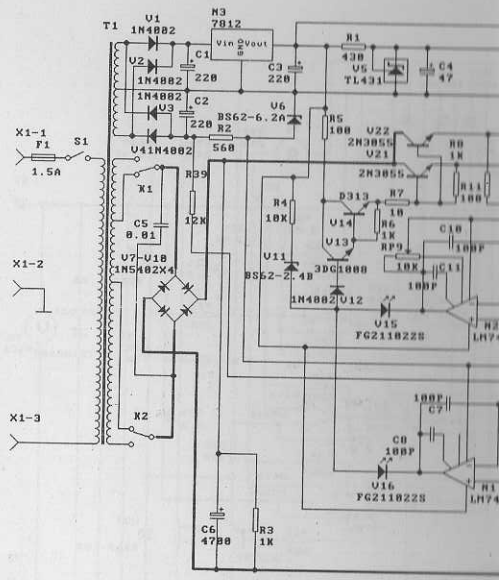
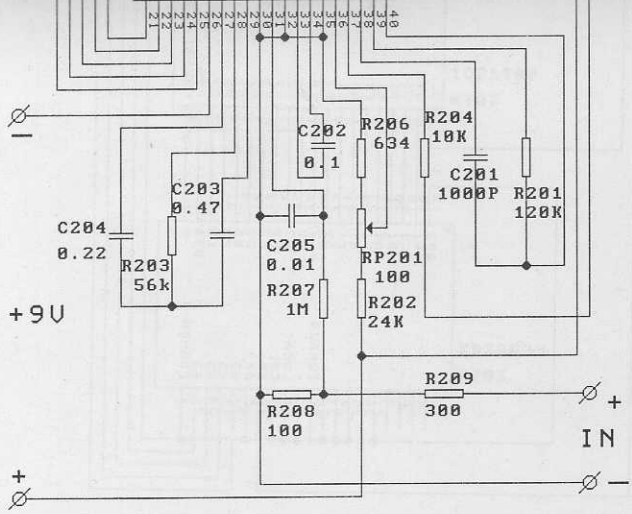
inal of power cord must be

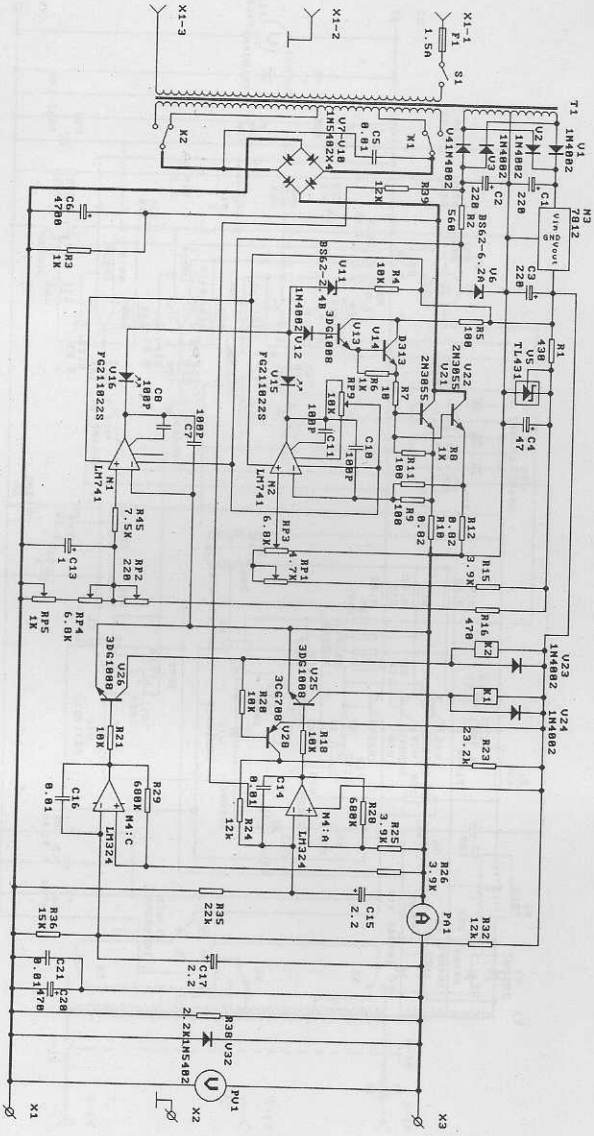


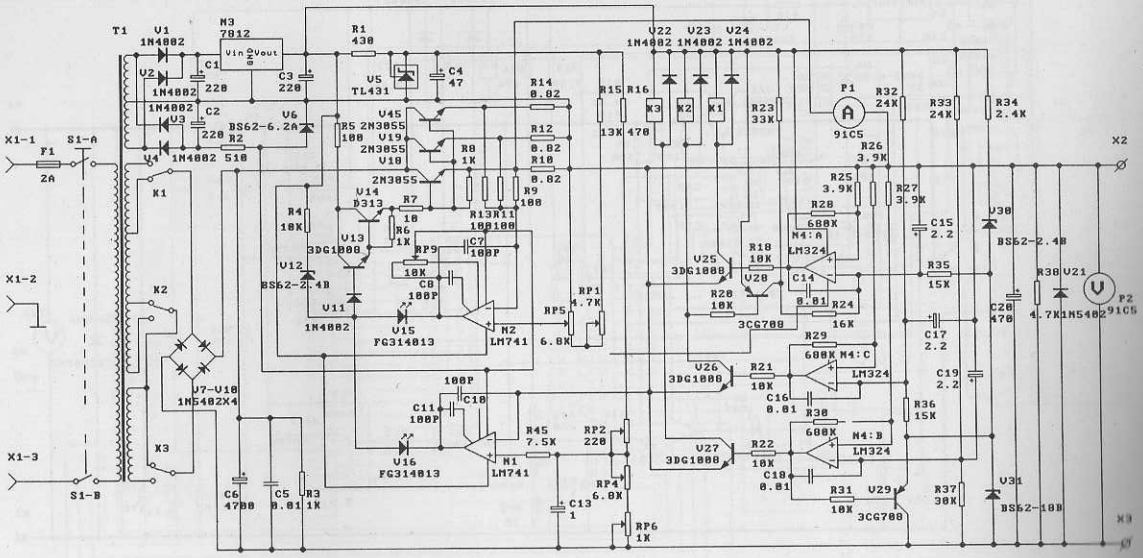
LED AMMETER


N202
EDS803A
N201
ICL7106
COMMON
LOBAT
COL
BP1
BP3
G2
C3
A3
G3
BP2
D1
C1
B1
A1
F1
G1
E1
D2
C2
B2
A2
F2
E2
D3
B3
F3
E3
AB4
POLARI
V+
OSE 1
OSE 2
OSE 3
TEST
REF HI
REF LO
C+REF
C-REF
COMMON
IN HIG
IN LOW
AUT ZE
BUFFER
INTEGR
V-
G2
C3
A3
G3
BACKPL
R201 120K
C201 1000P
R204 10K
R206 634
RP201 100
R202 24K
R209 300
C202 0.1
C205 0.01
R207 1M
R208 100
C203 0.47
R203 56k
C204 0.22
+9V
IN
+
-


T1
V1 1N4002
V2 1N4002
1N4002
V3
V41N4002
M3 7812
C1
C2
C3
R1
V5 TL431
C4
V6 BS62-6.2A
R5
R2
V22 2N3055
V21
R8
2N3055
R11
X1-1
F1
1.5A
S1
X1
R39
12K
R4
10K
D313
R7
V14
R6
V13
RP9
C10
C11
V11
BS62-2.4B
3DG100B
V12
1N4002
V15
FG211822S
X1-2
X1-3
X2
C5
0.01
V7-V18
1N5402X4
C7
C8
V16
C6
4700
R3
1K


C202
0.1
R206
634
R204
10K
C201
1000P
R201
120K
C203
0.47
C204
0.22
R203
56k
C205
0.01
R207
1M
RP201
100
R202
24K
+9V
R209
300
R208
100
IN


X1-3
X1-2
X1-1
F1
1.5A
S1
T1
X2
X1
X3
PA1
PV1
LM7812
TL431
LM741
LM324
2N3055
3DG1008
3CG708
FG211822S
1N4002
BS62-6.2A
BS62-2.4B


T1
V1 1N4002
V2 1N4002
V3 1N4002
V4 1N4002
M3 7812
C1 220
C2 220
C3 220
R1 430
R2 510
V6 BS62-6.2A
V5 TL431
C4 47
R5 100
V45 2N3055
V19 2N3055
V10 2N3055
R8 1K
R14 0.02
R12 0.02
R10 0.02
R9 100
R13 100
R11 100
V22 1N4002
V23 1N4002
V24 1N4002
R15 13K
R16 470
X3
X2
X1
R23 33K
P1 91C5
R32 24K
R33 24K
R34 2.4K
R26 3.9K
R25 3.9K
R27 3.9K
X2
X1-1
S1-A
F1 2A
K1
X1-2
K2
X1-3
X3
S1-B
R4 10K
V14 D313
R7 10
R6 1K
V13 3DG1008
V12 BS62-2.4B
V11 1N4002
C9 100P
RP9 10K
C7 100P
V15 FG314013
M2 LM741
RP1 4.7K
RP5 6.8K
V7-V10 1N5402X4
C11 100P
C10 100P
V16 FG314013
M1 LM741
R45 7.5K
RP2 220
RP4 6.8K
RP6 1K
C13 1
C6 4700
C5 0.01
R3 1K
R28 680K
M4:A LM324
V25 3DG1008
R18 10K
V28 3CG708
R20 10K
C14 0.01
R24 16K
C15 2.2
R35 15K
C17 2.2
V26 3DG1008
R21 10K
C16 0.01
R29 680K
M4:C LM324
R30 680K
M4:B LM324
V27 3DG1008
R22 10K
C18 0.01
R31 10K
V29 3CG708
C19 2.2
R36 15K
R37 30K
V30 BS62-2.4B
V31 BS62-10B
C20 470
R38 4.7K
V21 1N5402
P2 91C5
X3