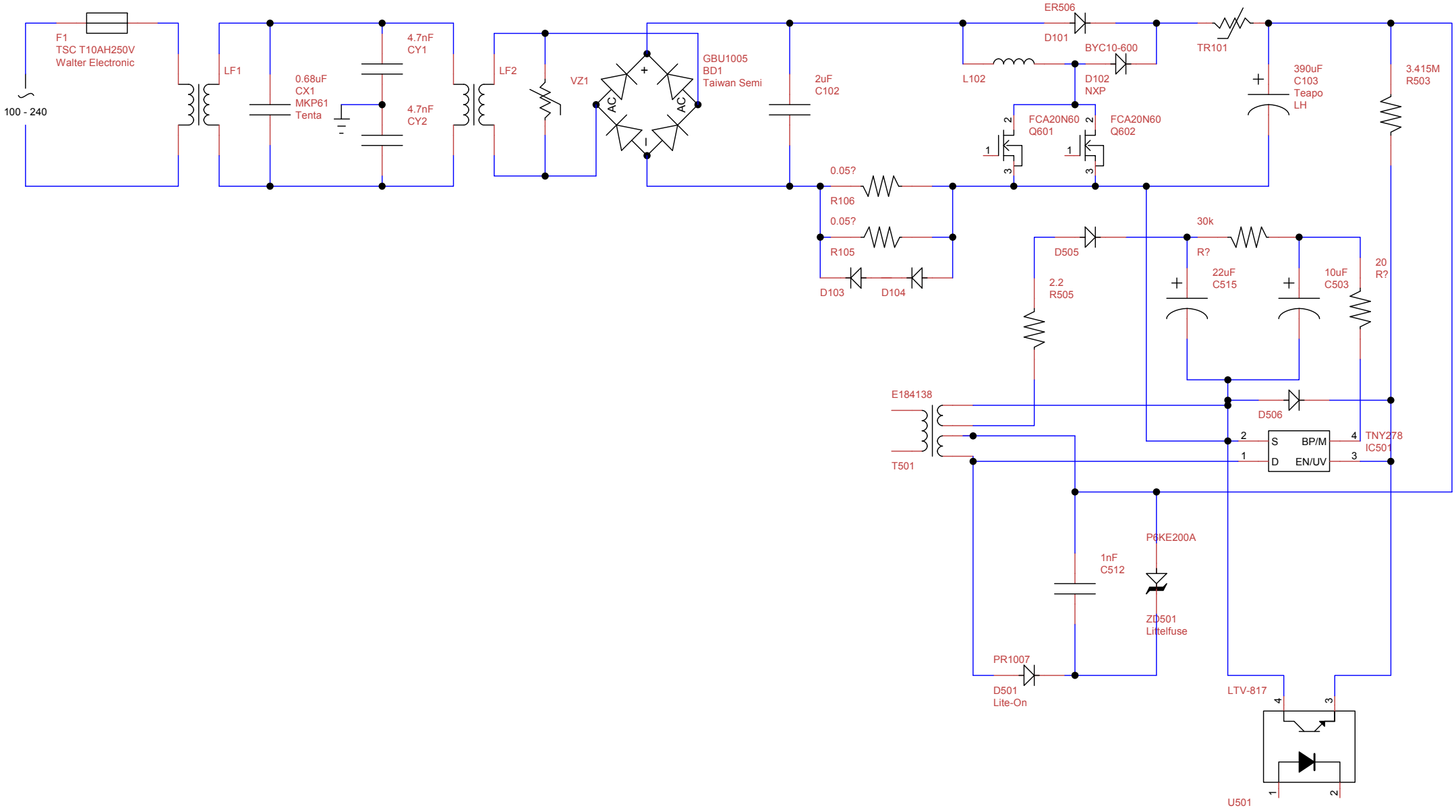

Title NO-636 (OCZ ModXStream Pro 600W)		
Author Dominic Chen		
File schematic.dsn		Document
Revision A6 (2010/07/02)	Date 2015/01/18	Sheets 1 of 1