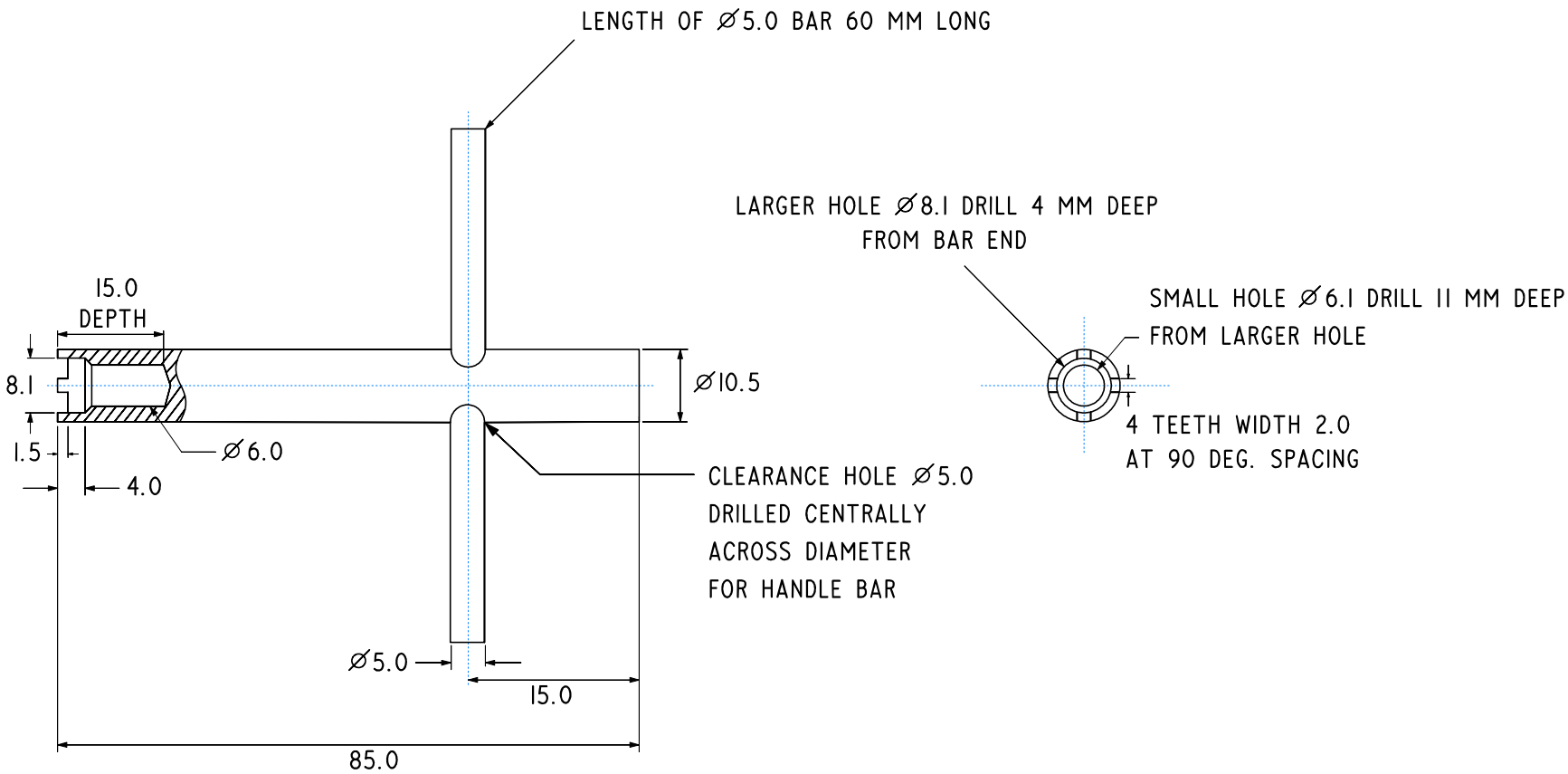

ALL DIMENSIONS IN MILLIMETRES
TOLERANCES +/- 0.05 MM
MATERIAL:- BRASS, ALUMINIUM OR MILD STEEL AS AVAILABLE

C1-112 OSCILLOSCOPE

TOOL FOR REMOVING LARGER KNOB COLLET FIXINGS

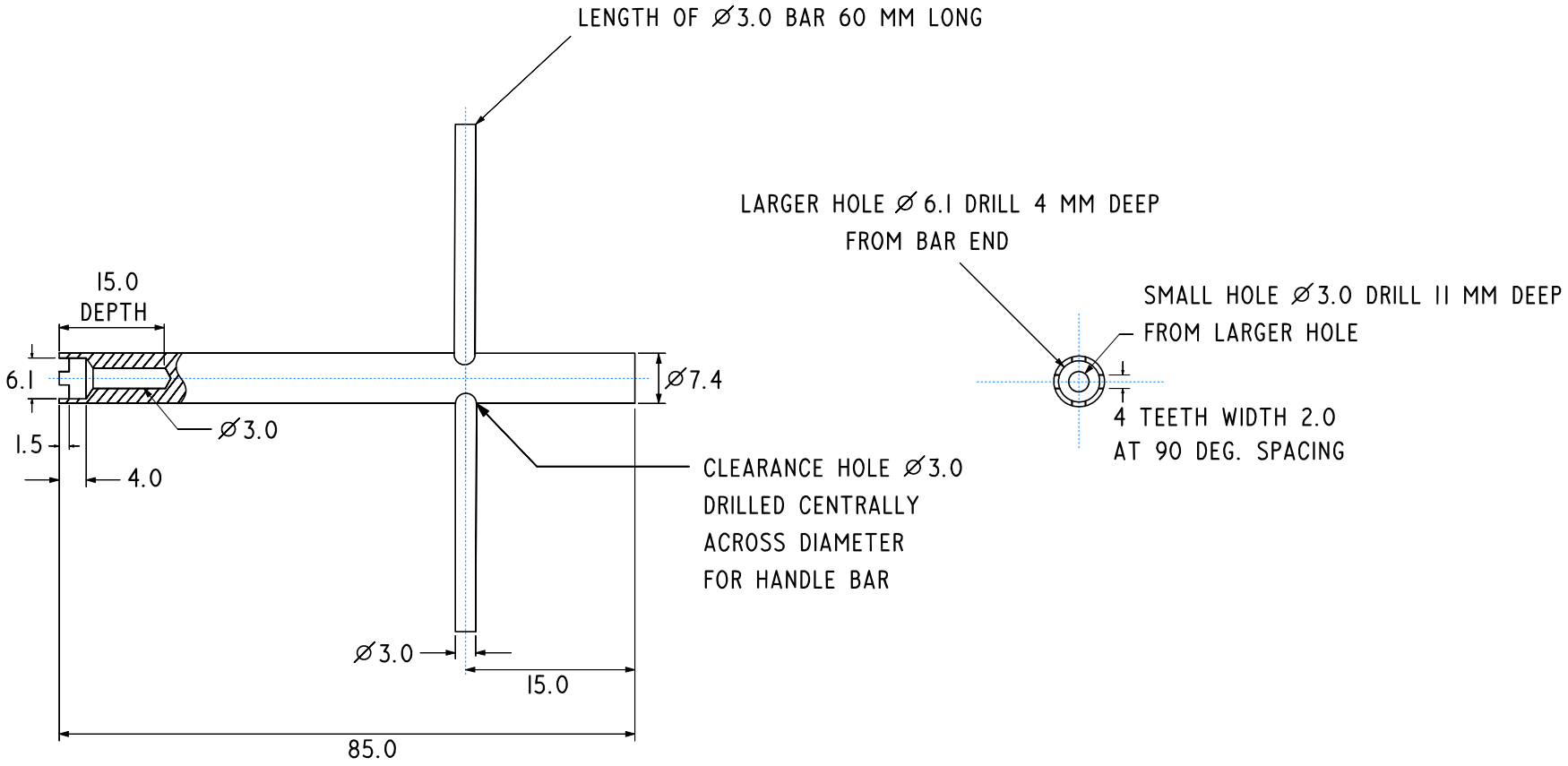

ALL DIMENSIONS IN MILLIMETRES
TOLERANCES +/- 0.05 MM
MATERIAL:- BRASS, ALUMINIUM OR MILD STEEL AS AVAILABLE

C1-112 OSCILLOSCOPE

TOOL FOR REMOVING SMALLER KNOB COLLET FIXINGS